Gear Pumps / Motors
Series PGP / PGM

Cast-Iron and Aluminium Designs

Catalogue HY11-3302/UK
February 2005

Contents

1

Description	Page
PGP/PGM500 Characteristics	3
PGP/PGM503 Ordering Code	4
PGP/PGM503 Technical Data / Dimensions	5
PGP/PGM505 Ordering Code	6
PGP/PGM505 Technical Data / Dimensions	7
PGP/PGM511 Ordering Code	10
PGP/PGM511 Technical Data / Dimensions	11
PGP/PGM517 Ordering Code	15
PGP/PGM517 Technical Data / Dimensions	16
PGP/PGM500 Ordering Code	18
PGP/PGM600 Characteristics	19
PGP/PGM620 Ordering Code	20
PGP/PGM620 Characteristic Curves	21
PGP/PGM620 Technical Data / Dimensions	22
PGP/PGM640 Ordering Code	24
PGP/PGM640 Characteristic Curves	25
PGP/PGM640 Technical Data / Dimensions	26
PGP/PGM600 Ordering Code	29
“Split Gear“ Pump	30
Shaft Loads	31
Hydraulic Fluids	31

Note

This document and other information from Parker Hannifin GmbH, its subsidiaries, sales offices and authorized distributors provide product or system options for further investigation by users having technical expertise. Before you select or use any product or system it is important that you analyse all aspects of your application and review the information concerning the product or system in the current product catalogue. Due to the variety of operating conditions and applications for these products or systems, the user, through his own analysis and testing, is solely responsible for making the final selection of the products and systems and assuring that all performance and safety requirements of the application are met. The products are subject to change by Parker Hannifin GmbH at any time without notice.

PGP 500 pumps offer superior performance, high efficiency and low noise operation at high operating pressures. They are produced in four frame sizes (PGP 503, PGP 505, PGP 511, PGP 517) with displacements ranging from 0.8 to 70 cm³/rev. A wide variety of standard options is available to meet specific application requirements.

Characteristics

- **Up to 275 bar continuous operation**
  High strength materials and large journal diameters provide low bearing loads for high pressure operation.
- **Low noise**
  PGP 503 - 9 tooth gear profile, PGP 505 and 517 - 13 tooth gear profile, PGP 511 - 12 tooth gear profile and optimized flow metering provide reduced pressure pulsation and exceptionally quiet operation (PGP511 also available as noise reduced “stealth“ version).
- **High efficiency**
  Pressure balanced bearing blocks assure maximum efficiency under all operating conditions.
- **Application flexibility**
  International mounts and connections, integrated valve capabilities and common inlet multiple pump configurations provide unmatched design and application versatility.
- **Large range of integrated valves**

Technical data

Pump type	Heavy-duty, aluminium, external gear.
Mounting	SAE, rectangular, thru-bolt standard specials on request.
Ports	SAE and metric split flanges and others
Shaft style	SAE splined, keyed, tapered, cylindrical tang drive, specials on request.
Speed	500 - 4000 rpm, see tables
Theor. displacement	See tables
Drive	Drive direct with flexible coupling is recommended.
Axial / Radial load	Units subject to axial or radial loads must be specified with an outboard bearing.
Inlet pressure	Operating range 0.8 to 2 bar abs. Min. inlet pressure 0.5 bar abs. Short time without load. Consultation is recommended.
Outlet pressure	See tables
Hydraulic fluids	Hydraulic oil H-LP, DIN 51525
Fluid temperature	Range of operating temperature -15 to +80°C. Max. permissible operating pressure dependent on fluid temperature. Temperature for cold start -20 to -15°C at speed ≤ 1500 rpm. Max. permissible operating pressure dependent on fluid temperature.

Fluid viscosity	Range of operating viscosity 8 to 1000 mm²/s. Max. permissible operating pressure dependent on viscosity. Viscosity range for cold start 1000 to 2000 mm²/s at operating pressure p≤10 bar and speed n ≤1500 rpm.
Range of ambient temperature	-40°C - +70°C
Filtration	According to ISO 4406 Cl. 16/13
Direction of rotation (looking at the drive shaft)	Clockwise, counter-clockwise or double. Attention! Drive pump only in indicated direction of rotation.
Multiple pump assemblies	• Available in two or three section configuration. • Max. shaft loading must be conform to the limitations shown in the shaft loading rating table in this catalogue. • Max. load is determined by adding the torque values for each pumping section that will be simultaneously loaded.
Separate or common inlet capability	Separate inlet configuration: • Each gear housing has individual inlet and outlet ports. Common inlet configuration: • Two gear sets share a common inlet.

1

PG		503										B	1	B	1	1)
Gear design	Type		Unit	Dis-place-ment	Rotation	Shaft	Flange	Shaft seal	Inlet side ports option		Outlet side ports option	No rear ports (rear ports on request)				

Code	Type
P	**Pump**
M	Motor

Code	Unit	
	Pump	Motor
A	**Single unit**	**Standard motor w/o checks**
B	Multiple unit	Standard motor w. two checks
C	—	Standard motor w. one anti-cavitation check (ACC)

Displacement	
Code	ccm
0008	**0.8**
0012	**1.2**
0016	**1.6**
0021	**2.1**
0025	**2.5**
0033	**3.3**
0043	**4.3**
0058	**5.8**
0079	**7.9**

Code	Rotation
C	**Clockwise**
A	Counter-clockwise
B	Bi-directional

Code	Shaft
H1 [2]	Ø10, 3.0key, no thread, 36L, parallel
P2 [3]	**Ø9.35, 8.8L, 2.4key, M6, taper 1:8**
V1 [4]	5x6.5 long shaft w/o coupling tang drive
V2 [5]	5x4.5 short shaft w/o coupling tang drive

[2] Only used with flange H1, D1.
[3] Only used with flange D1.
[4] Only used with flange H1.
[5] Only used with flange P3, P4.

Code	Port options (pumps)
E3E2	**1/2 - 14 BSP thread/ 3/8 - 19 BSP thread**
J4J3	12mm - Ø30mm - M6 square flange/ 8mm - Ø30mm - M6 square flange
Code	**Port options (motors)**
E3E3	1/2 - 14 BSP thread 1/2 - 14 BSP thread
J4J4	12mm - Ø30mm - M6 square flange 12mm - Ø30mm - M6 square flange

Example: E3 = inlet port
E2 = outlet port

Code	Shaft seal
X	No seal
N	**NBR**

Code	Flange
D1	**52.2x72.0 - Ø25.4 rectangular**
H1	82.5 - Ø50.8 SAE "A-A" 2bolt flange
P3	40.0x40.0 - Ø32.0 w/ seal, thrubolt flange
P4	40.0x40.0 - Ø32.0 w/ seal f. short shaft, thrubolt flange

[1] Code of drain dine for PGM503 only.
2 Options:
N4 = M10x1, rear drain.
B1 = no drain, product type must be “B“ or “C“.

Bold letters =
Short-term availability

PI PGP-PGM UK.PMD RH

Parker Hannifin GmbH
Hydraulic Controls Division
Kaarst, Germany

PGP503 A XXXX Y P2 D1 N E3 E2 B1 B1

"Y" = C (clockwise rotation)
= A (counter-clockwise rotation)

Displacement		Dimension		Inlet port			Outlet port			Speed of rotation		Working pressure	Order number direction of rotation	
XXXX	cm³/rev	A	B		G	F		G	F	min. rpm	max. rpm	max. bar	clockwise	counter-clockwise
0008	0.8	75.2	37.6	E3	G ½"	34.0	E2	G 3/8"	30.0	500	4000	275	**330 9111 196**	330 9112 159
0012	1.2	76.7	38.4	E3	G ½"	34.0	E2	G 3/8"	30.0	500	4000	275	**330 9111 197**	330 9112 172
0016	1.6	78.2	39.1	E3	G ½"	34.0	E2	G 3/8"	30.0	500	4000	275	**330 9111 198**	330 9112 173
0021	2.1	79.8	39.9	E3	G ½"	34.0	E2	G 3/8"	30.0	500	4000	275	**330 9111 199**	330 9112 174
0025	2.5	81.4	40.7	E3	G ½"	34.0	E2	G 3/8"	30.0	500	4000	275	**330 9111 200**	330 9112 175
0033	3.3	84.4	42.2	E3	G ½"	34.0	E2	G 3/8"	30.0	500	4000	275	**330 9111 201**	330 9112 176
0036	3.6	85.5	42.8	E3	G ½"	34.0	E2	G 3/8"	30.0	500	4000	250	**330 9111 202**	330 9112 177
0043	4.3	88.4	44.2	E3	G ½"	34.0	E2	G 3/8"	30.0	500	3500	210	**330 9111 203**	330 9112 160
0048	4.8	89.9	45.0	E3	G ½"	34.0	E2	G 3/8"	30.0	500	3000	160	**330 9111 204**	330 9112 178
0058	5.8	93.7	46.9	E3	G ½"	34.0	E2	G 3/8"	30.0	500	3000	160	**330 9111 205**	330 9112 179
0062	6.2	95.2	47.6	E3	G ½"	34.0	E2	G 3/8"	30.0	500	3000	150	**330 9111 206**	330 9112 180
0079	7.9	101.5	50.8	E3	G ½"	34.0	E2	G 3/8"	30.0	500	2500	120	**330 9111 180**	330 9112 161

PGM 503 min. displacement 4.00 ccm

Dimensions (clockwise rotation shown)

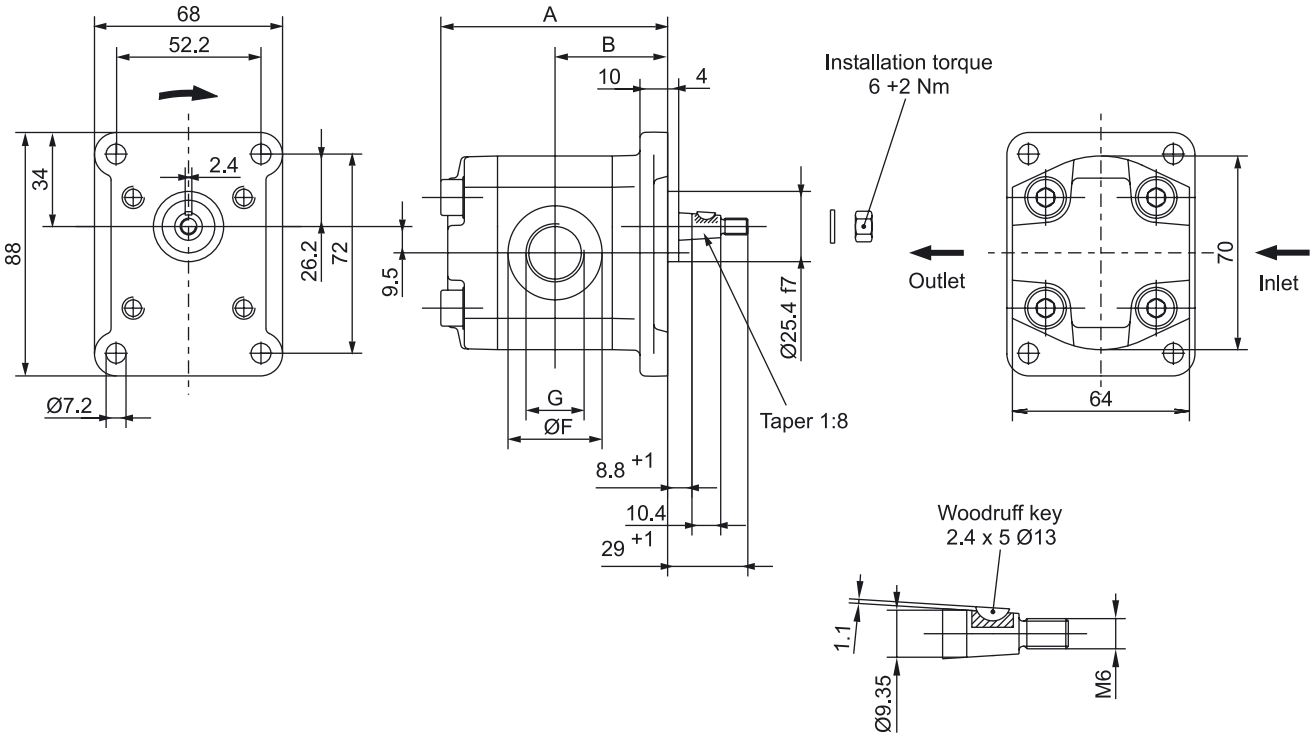

1

PG		505										B	1	B	1	1)
Gear design	Type		Unit	Dis-place-ment	Rotation	Shaft	Flange	Shaft seal	Inlet side ports option		Outlet side ports option	No rear ports (rear ports on request)				

Code	Type
P	**Pump**
M	Motor

Code	Unit	
	Pump	Motor
A	**Single unit**	**Standard motor w/o checks**
M	Single distributor unit	—
B	Multiple unit	Standard motor w. two checks
C	—	Standard motor w. one anti-cavitation check (ACC)

Displacement	
Code	ccm
0030	**3.0**
0040	**4.0**
0060	**6.0**
0080	**8.0**
0100	**10.0**
0120	**12.0**

Code	Rotation
C	**Clockwise**
A	Counter-clockwise
B	Bi-directional

Code	Shaft
A1 2)	**9T, 16/32DP, 32L, SAE "A" spline**
J1 2)	Ø12.7, 3.2key, no thread, 38L, parallel
K1 3)	Ø15.88, 4.0key, no thread, 32L, SAE "A", parallel
Q2 4)	**Ø14.25, 5.5L, 3.0key, M10x1, taper 1:8**

2) Only used with flange H1, H2.
3) Only used with flange H2.
4) Only used with flange D2.

Code	Port options (pumps)
E5E3	**3/4 - 14 BSP thread/ 1/2 - 14 BSP thread**
J7J5	**20mm - Ø40mm - M6 square flange/ 15mm - Ø35mm - M6 square flange**
Code	Port options (motors)
E3E3	3/4 - 14 BSP thread 3/4 - 14 BSP thread
J5J5	15mm - Ø35mm - M6 square flange 15mm - Ø35mm - M6 square flange

Example: J7 = inlet port
J5 = outlet port

Code	Shaft seal
X	No seal
N	**NBR**

Code	Flange
D2 5)	**56.0x73.0 - Ø30.0 rectangular**
H1	82.5 - Ø50.8 SAE "A-A" 2bolt flange
H2 6)	**106.4 - Ø82.55 SAE "A" 2bolt flange**

5) Only used with ports J*J*.
6) Only used with ports E*E*.

1) Code of drain line for PGM505 only.
2 Options:
G4 = 1/4-19 BSP rear drain.
B1 = no drain, product type must be “B“ or “C“.

Bold letters =
Short-term availability

PI PGP-PGM UK.PMD RH

Parker Hannifin GmbH
Hydraulic Controls Division
Kaarst, Germany

PGP505 A XXXX Y A1 H2 N E5 E3 B1 B1

"Y" = C (clockwise rotation)
= A (counter-clockwise rotation)

Displacement		Dimension			Inlet port			Outlet port			Speed of rotation		Working pressure	Order number direction of rotation	
XXXX	cm³/rev	A	B	C		G	F		G	F	min. rpm	max. rpm	max. bar	clockwise	counter-clockwise
0030	3.0	35.9	41.1	79.8	E5	3/4" -14 BSP	42.0	E3	1/2" -14 BSP	34.0	500	4000	275	**331 9111 385**	
0040	4.0	37.2	43.8	79.8	E5	3/4" -14 BSP	42.0	E3	1/2" -14 BSP	34.0	500	4000	275	**331 9111 386**	
0060	6.0	39.8	49.1	84.8	E5	3/4" -14 BSP	42.0	E3	1/2" -14 BSP	34.0	500	3600	275	**331 9111 387**	
0080	8.0	42.5	54.5	89.8	E5	3/4" -14 BSP	42.0	E3	1/2" -14 BSP	34.0	500	3000	275	**331 9111 383**	331 9112 136
0100	10.0	45.2	59.8	100.8	E5	3/4" -14 BSP	42.0	E3	1/2" -14 BSP	34.0	500	2800	250	**331 9111 388**	
0120	12.0	47.9	65.2	104.8	E5	3/4" -14 BSP	42.0	E3	1/2" -14 BSP	34.0	500	2400	220	**331 9111 389**	

Dimensions (clockwise rotation shown)

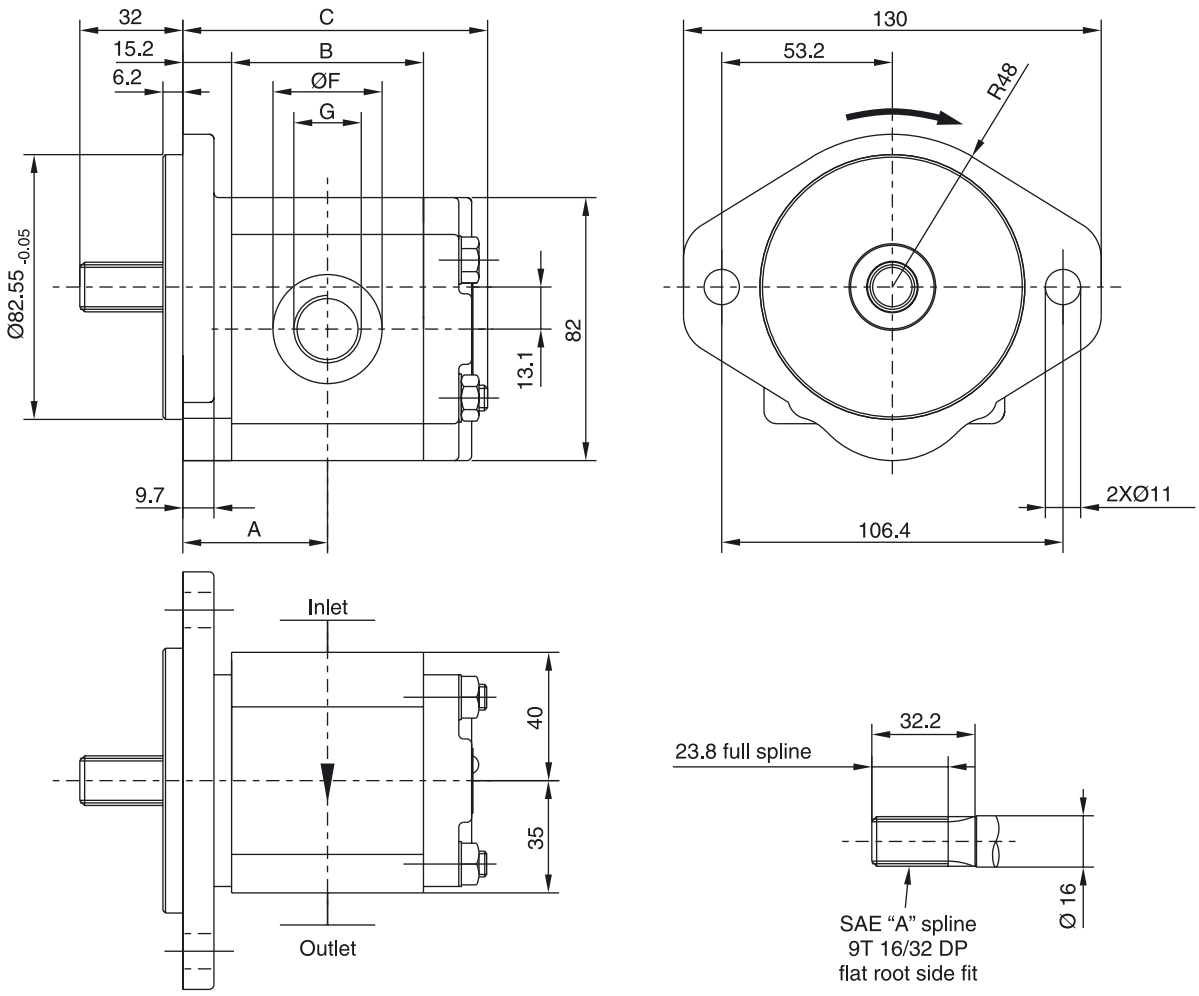

1

PGP505 A XXXX Y Q2 D2 N J7 J5 B1 B1

"Y" = C (clockwise rotation)
= A (counter-clockwise rotation)

Displacement		Dimension			Inlet port				Outlet port				Speed of rotation		Working pressure	Order number direction of rotation	
XXXX	cm³/rev	A	B	C		d	D	G		d	D	G	min. rpm	max. rpm	max. bar	clockwise	counter-clockwise
0030	3.0	35.9	41.1	74.3	J7	20.0	40.0	M6	J5	15.0	35.0	M6	500	4000	275	**331 9111 334**	
0040	4.0	37.2	43.8	76.4	J7	20.0	40.0	M6	J5	15.0	35.0	M6	500	4000	275	**331 9111 039**	331 9112 061
0060	6.0	39.8	49.1	81.7	J7	20.0	40.0	M6	J5	15.0	35.0	M6	500	3600	275	**331 9111 040**	331 9112 077
0080	8.0	42.5	54.5	87.1	J7	20.0	40.0	M6	J5	15.0	35.0	M6	500	3000	275	**331 9111 041**	331 9112 078
0100	10.0	45.2	59.8	92.4	J7	20.0	40.0	M6	J5	15.0	35.0	M6	500	2800	250	**331 9111 087**	331 9112 033
0120	12.0	47.9	65.2	97.8	J7	20.0	40.0	M6	J5	15.0	35.0	M6	500	2400	220	**331 9111 246**	331 9112 135

Dimensions (clockwise rotation shown)

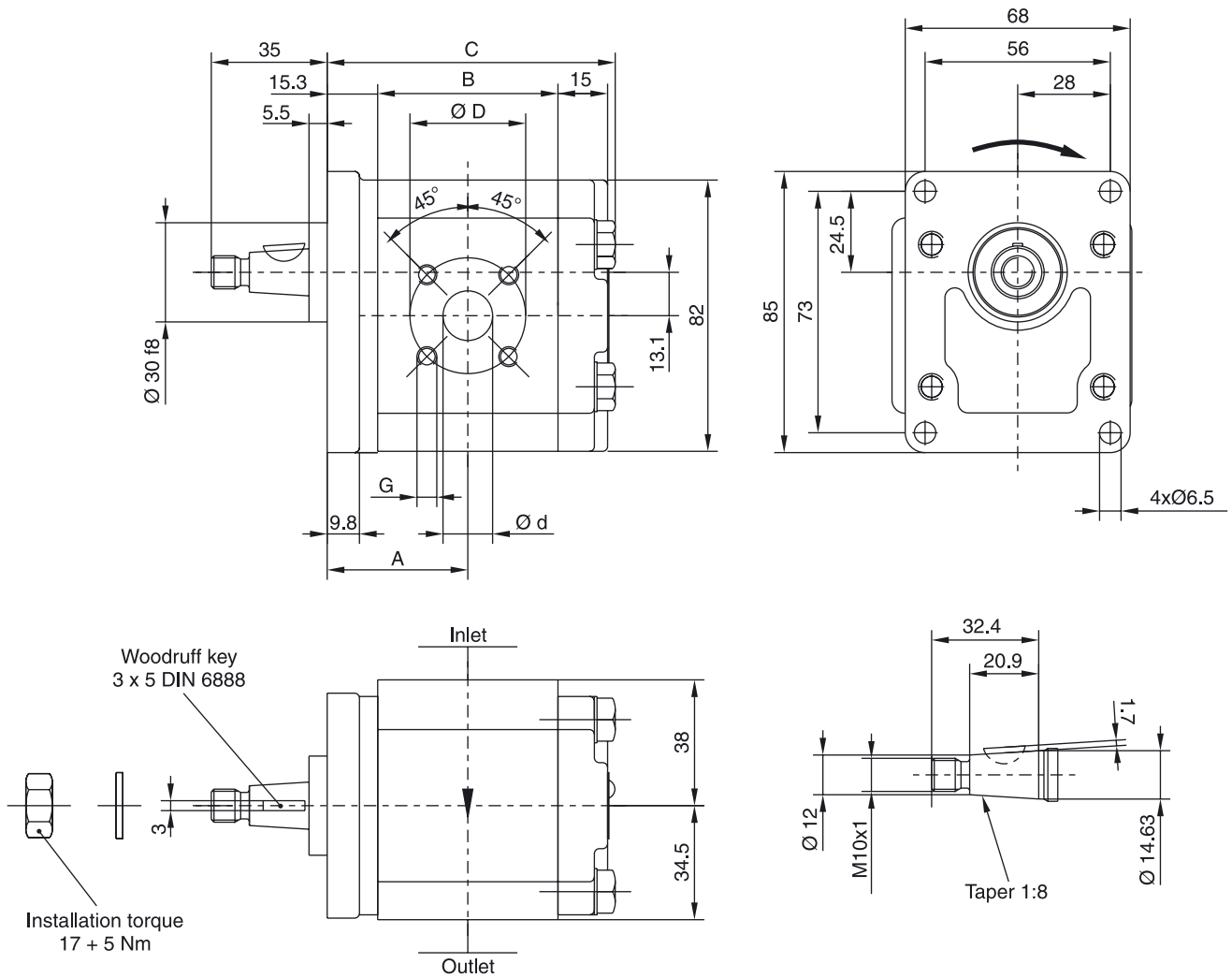

Parker Hannifin GmbH
Hydraulic Controls Division
Kaarst, Germany

PGP505 A XXXX Y A1 H2 N SS PP B1 B1

"Y" = C (clockwise rotation)
= A (counter-clockwise rotation)

Displacement		Dimension			Inlet port			Outlet port			Speed of rotation		Working pressure	Order number direction of rotation	
XXXX	cm³/rev	A	B	C	SS	G	F	PP	G	F	min. rpm	max. rpm	max. bar	clockwise	counter-clockwise
0020	2.0	34.5	38.5	71.1	D4	7/8" -14 UNF	34.0	D3	3/4"-16" UNF	30.0	500	4000	275	**331 9111 235**	331 9112 131
0030	3.0	35.8	41.1	73.7	D5	1 1/16" -12 UNF	41.0	D4	7/8"-14" UNF	34.0	500	4000	275	**331 9111 033**	331 9112 004
0040	4.0	37.2	43.8	76.4	D5	1 1/16" -12 UNF	41.0	D4	7/8"-14" UNF	34.0	500	4000	275	**331 9111 034**	331 9112 090
0050	5.0	38.5	46.5	79.1	D5	1 1/16" -12 UNF	41.0	D4	7/8"-14" UNF	34.0	500	4000	275	**331 9111 236**	331 9112 091
0060	6.0	39.8	49.1	81.7	D5	1 1/16" -12 UNF	41.0	D4	7/8"-14" UNF	34.0	500	3600	275	**331 9111 016**	331 9112 007
0080	8.0	42.5	54.5	87.1	D5	1 1/16" -12 UNF	41.0	D4	7/8"-14" UNF	34.0	500	3000	275	**331 9111 045**	331 9112 009
0100	10.0	45.2	59.8	92.4	D5	1 1/16" -12 UNF	41.0	D4	7/8"-14" UNF	34.0	500	2800	250	**331 9111 046**	331 9112 010
0110	11.0	46.5	62.5	95.1	D5	1 1/16" -12 UNF	41.0	D4	7/8"-14" UNF	34.0	500	2400	250	**331 9111 047**	331 9112 092
0120	12.0	47.9	65.2	97.8	D5	1 1/16" -12 UNF	41.0	D4	7/8"-14" UNF	34.0	500	2400	220	**331 9111 014**	331 9112 012

Dimensions (clockwise rotation shown)

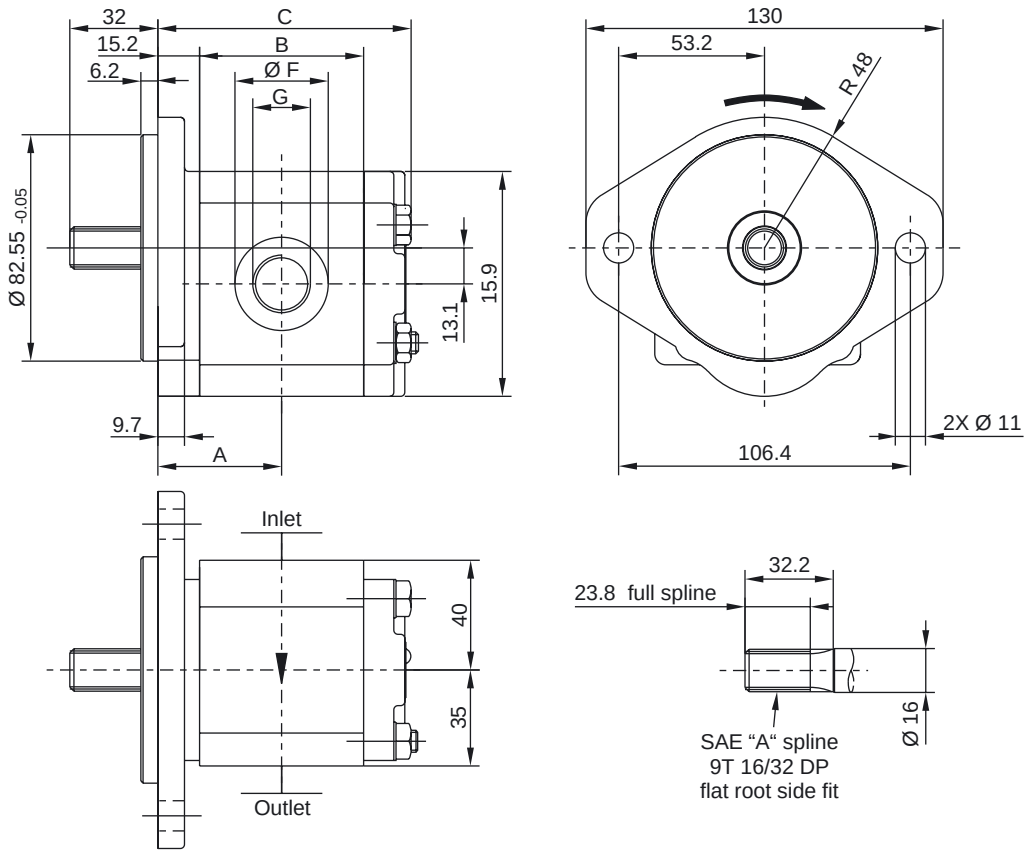

1

PG		511										B	1	B	1	1)
Gear design	Type		Unit	Dis-place-ment	Rotation	Shaft	Flange	Shaft seal	Inlet side ports option		Outlet side ports option	No rear ports (rear ports on request)				

Code	Type
P	**Pump**
M	Motor

Code	Unit	
	Pump	Motor
A	**Single unit**	**Standard motor w/o checks**
M	Single distributor unit	—
B	Multiple unit	Standard motor w. two checks
C	—	Standard motor w. one anti-cavitation check (ACC)

Displacement	
Code	ccm
0040	**4.0**
0060	**6.0**
0080	**8.0**
0100	**10.0**
0110	**11.0**
0140	**14.0**
0160	**16.0**
0190	**19.0**
0230	**23.0**
0270	**27.0**
0310	**31.0**
0330	**33.0**

Code	Rotation
C	**Clockwise**
A	Counter-clockwise
B	Bi-directional

Code	Shaft
A1 2)	**9T, 16/32DP, 32L, SAE "A" spline**
C1 3)	11T, 16/32DP, 38.2L, SAE 19-4 spline
F1 4)	9T, B17x14, 23L, DIN 5482 spline
K1 2)	Ø15.88, 4.0key, no thread, 32L, SAE "A", parallel
L6 2)	Ø19.05, 4.8key, no thread, 32L, SAE 19-1, parallel
S1 4)	**Ø17.0, 7.7L, 3.0key, M12x1.5, taper 1:5**
S2 5)	**Ø16.65, 12.0L, 3.2key, M12x1.5, taper 1:8**
S4 5)	Ø16.65, 12.0L, 4.0key, M12x1.5, taper 1:8

2) Only used with flange H2.
3) Only used with flange H2, H3.
4) Only used with flange D4, Q2, Q4.
5) Only used with flange D3.

Code	Shaft seal
X	No seal
N	**NBR**

1) Code of drain line for PGM511 only.
2 Options:
G4 = 1/4-19 BSP rear drain.
B1 = no drain, product type must be "B" or "C".

Bold letters =
Short-term availability

Code	Port options (Pumps)
E5E3	3/4 - 14 BSP thread/ 1/2 - 14 BSP thread only from 4ccm to 11ccm
E6E5	1-11 BSP thread/ 3/4-14 BSP thread only from 14ccm to 23ccm
E7E5	1 1/4-11 BSP thread/ 3/4-14 BSP thread only from 27ccm to 33ccm
J7J5	**20mm-Ø40mm-M6 square flange 15mm-Ø35mm-M6 square flange only from 4ccm to 11ccm**
J9J8	**26mm-Ø55mm-M8 square flange 18mm-Ø55mm-M8 square flange only from 14ccm to 33ccm**
L1L1	**13mm-Ø30mm-M6 diamond flange 13mm-Ø30mm-M6 diamond flange only from 4ccm to 8ccm**
L2L1	**19mm-Ø40mm-M8 diamond flange 13mm-Ø30mm-M6 diamond flange only from 10ccm to 16ccm**
L2L2	**19mm-Ø40mm-M8 diamond flange 19mm-Ø40mm-M8 diamond flange only from 19ccm to 33ccm**

Code	Port options (Motors)
E3E3	1/2 - 14 BSP thread/ 1/2 - 14 BSP thread only from 4ccm to 11ccm
E5E5	3/4 - 14 BSP thread/ 3/4 - 14 BSP thread only from 14ccm to 33ccm
J5J5	15mm-Ø35mm-M6 square flange 15mm-Ø35mm-M6 square flange only from 4ccm to 16ccm
J7J7	20mm-Ø40mm-M6 square flange 20mm-Ø40mm-M6 square flange only from 19ccm to 33ccm

Example: L2 = inlet port
L1 = outlet port

Code	Flange
D3 6)	**71.4x96.0 - Ø36.47 rectangular**
D4 7)	**72.0x100.0 - Ø80 rectangular**
H2 6)	**106.4 - Ø82.55 SAE "A" 2bolt flange**
H3	146.1 - Ø101.06 SAE "B" 2bolt flange
Q2	60.0x60.0 - Ø50.0 w. seal O', thrubolt flange
Q4	60.0x60.0 - Ø50.0 w. seal O', thrubolt flange

6) Only used with ports L*L*.
7) Only used with ports J*J*.

PI PGP-PGM UK.PMD RH

Parker Hannifin GmbH
Hydraulic Controls Division
Kaarst, Germany

PGP511 A XXXX Y A1 H2 N SS PP B1 B1

"Y" = C (clockwise rotation)
= A (counter-clockwise rotation)

Displacement		Dimension			Inlet port				Outlet port				Speed of rotation		Working pressure	Order number direction of rotation	
XXXX	cm³/rev	A	B	C	SS	d	D	G	PP	d	D	G	min. rpm	max. rpm	max. bar	clockwise	counter-clockwise
0040	4.0	42.6	47.0	86.7	L1	13	30	M6	L1	13	30	M6	500	3500	250	**334 9111 182**	334 9112 092
0060	6.0	44.1	50.1	89.8	L1	13	30	M6	L1	13	30	M6	500	3500	250	**334 9111 183**	334 9112 093
0080	8.0	45.7	53.3	93.0	L1	13	30	M6	L1	13	30	M6	500	2500	250	**334 9111 734**	
0100	10.0	47.3	56.5	96.1	L2	19	40	M8	L1	13	30	M6	500	3500	250	**334 9111 185**	334 9112 095
0110	11.0	48.1	58.0	97.7	L2	19	40	M8	L1	13	30	M6	500	3500	250	**334 9111 186**	334 9112 096
0140	14.0	50.4	62.8	102.4	L2	19	40	M8	L1	13	30	M6	500	3100	250	**334 9111 187**	334 9112 097
0160	16.0	52.0	65.9	105.6	L2	19	40	M8	L1	13	30	M6	500	2700	250	**334 9111 737**	
0190	19.0	54.4	70.6	110.3	L2	19	40	M8	L2	19	40	M8	500	2300	250	**334 9111 966**	
0230	23.0	57.5	76.9	116.6	L2	19	40	M8	L2	19	40	M8	500	1900	210	**334 9111 754**	334 9112 485
0270	27.0	60.7	83.2	122.9	L2	19	40	M8	L2	19	40	M8	500	1600	180	**334 9111 576**	
0310	31.0	63.8	89.5	129.2	L2	19	40	M8	L2	19	40	M8	500	1500	160	**334 9111 967**	
0330	33.0	65.4	92.6	132.3	L2	19	40	M8	L2	19	40	M8	500	1500	150	**334 9111 191**	334 9112 101

Dimensions (clockwise rotation shown)

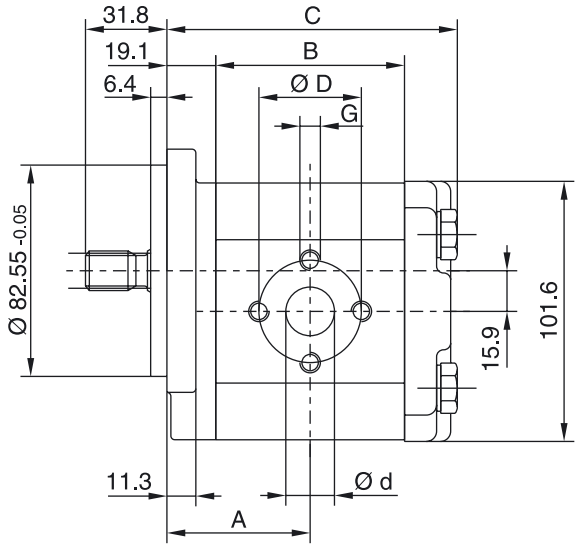

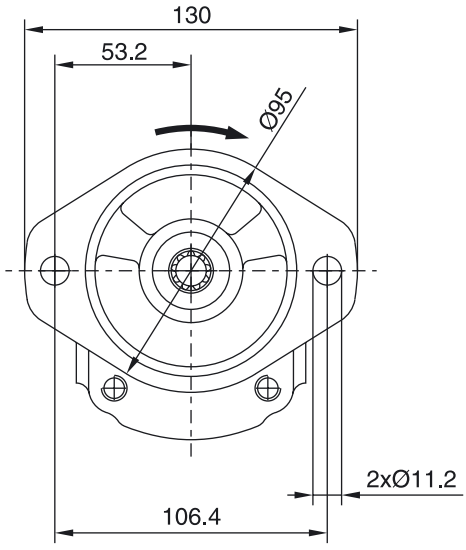

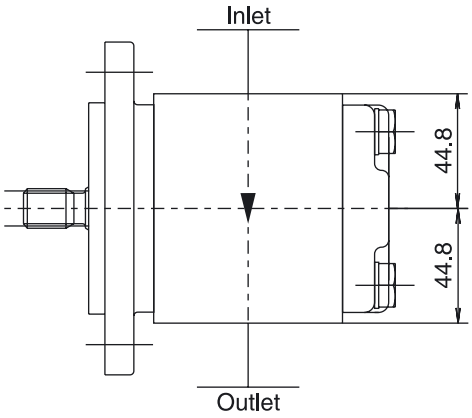

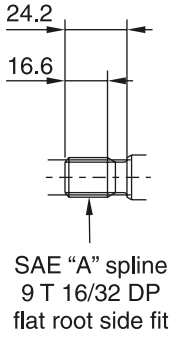

1

PGP511 A XXXX Y S1 D4 N SS PP B1 B1

"Y" = C (clockwise rotation)
= A (counter-clockwise rotation)

Displacement		Dimension			Inlet port				Outlet port				Speed of rotation		Working pressure	Order number direction of rotation	
XXXX	cm³/rev	A	B	C	SS	d	D	G	PP	d	D	G	min. rpm	max. rpm	max. bar	clockwise	counter-clockwise
0040	4.0	42.6	47.0	86.7	J7	20	40	M6	J5	15	35	M6	500	3500	250	**334 9111 149**	334 9112 289
0060	6.0	44.1	50.1	89.8	J7	20	40	M6	J5	15	35	M6	500	3500	250	**334 9111 465**	334 9112 298
0080	8.0	45.7	53.3	93.0	J7	20	40	M6	J5	15	35	M6	500	3500	250	**334 9111 151**	334 9112 291
0100	10.0	47.4	56.5	96.2	J7	20	40	M6	J5	15	35	M6	500	3500	250	**334 9111 466**	334 9112 292
0110	11.0	48.1	58.0	97.7	J7	20	40	M6	J5	15	35	M6	500	3500	250	**334 9111 152**	334 9112 238
0140	14.0	50.4	62.8	102.4	J9	26	55	M8	J8	18	55	M8	500	3500	250	**334 9111 968**	
0160	16.0	52.0	65.9	105.6	J9	26	55	M8	J8	18	55	M8	500	3500	250	**334 9111 969**	
0190	19.0	54.4	70.6	110.3	J9	26	55	M8	J8	18	55	M8	500	3250	250	**334 9111 970**	
0230	23.0	57.5	76.9	116.6	J9	26	55	M8	J8	18	55	M8	500	2750	225	**334 9111 971**	
0270	27.0	60.7	83.2	122.9	J9	26	55	M8	J8	18	55	M8	500	2350	190	**334 9111 972**	
0310	31.0	63.8	89.5	129.2	J9	26	55	M8	J8	18	55	M8	500	2100	165	**334 9111 526**	
0330	33.0	65.4	92.6	132.3	J9	26	55	M8	J8	18	55	M8	500	2000	155	**334 9111 973**	

Dimensions (clockwise rotation shown)

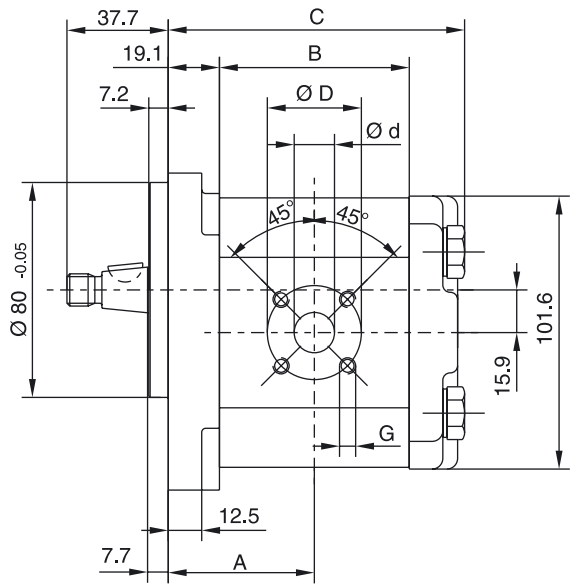

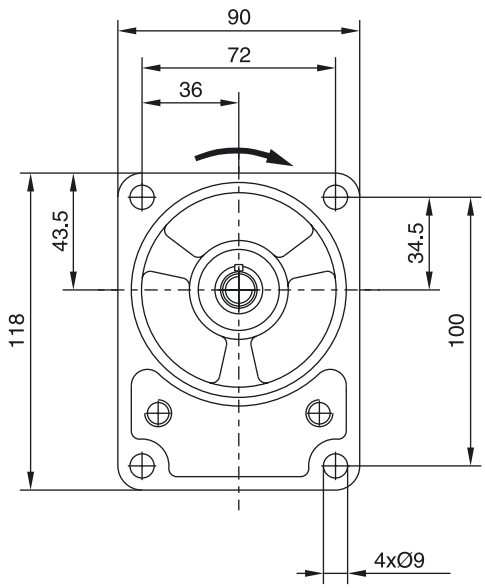

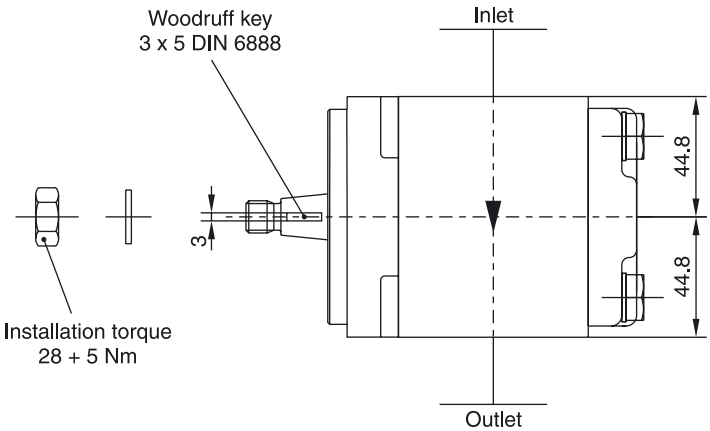

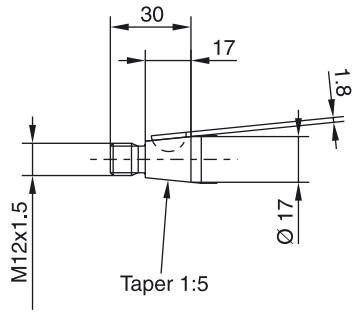

PI PGP-PGM UK.PMD RH

Parker Hannifin GmbH
Hydraulic Controls Division
Kaarst, Germany

PGP511 A XXXX Y S2 D3 N SS PP B1 B1

"Y" = C (clockwise rotation)
= A (counter clockwise rotation)

Displacement		Dimension			Inlet port				Outlet port				Speed of rotation		Working pressure	Order number direction of rotation	
XXXX	cm³/rev	A	B	C	SS	d	D	G	PP	d	D	G	min. rpm	max. rpm	max. bar	clockwise	counter-clockwise
0040	4.0	42.6	47.0	86.7	L1	13	30	M6	L1	13	30	M6	500	3500	250	**334 9111 403**	334 9112 398
0060	6.0	44.1	50.1	89.8	L1	13	30	M6	L1	13	30	M6	500	3500	250	**334 9111 404**	334 9112 395
0080	8.0	45.7	53.3	93.0	L1	13	30	M6	L1	13	30	M6	500	2500	250	**334 9111 091**	334 9112 397
0100	10.0	47.3	56.5	96.1	L2	19	40	M8	L1	13	30	M6	500	3500	250	**334 9111 975**	
0110	11.0	48.1	58.0	97.7	L2	19	40	M8	L1	13	30	M6	500	3500	250	**334 9111 976**	334 9112 399
0140	14.0	50.4	62.8	102.4	L2	19	40	M8	L1	13	30	M6	500	3100	250	**334 9111 292**	334 9112 400
0160	16.0	52.0	65.9	105.6	L2	19	40	M8	L1	13	30	M6	500	2700	250	**334 9111 293**	
0190	19.0	54.4	70.6	110.3	L2	19	40	M8	L2	19	40	M8	500	2300	250	**334 9111 977**	
0230	23.0	57.5	76.9	116.6	L2	19	40	M8	L2	19	40	M8	500	1900	225	**334 9111 295**	
0270	27.0	60.7	83.2	122.9	L2	19	40	M8	L2	19	40	M8	500	1600	190	**334 9111 296**	
0310	31.0	63.8	89.5	129.2	L2	19	40	M8	L2	19	40	M8	500	1500	165	**334 9111 978**	
0330	33.0	65.4	92.6	132.3	L2	19	40	M8	L2	19	40	M8	500	1500	155	**334 9111 297**	

Dimensions (clockwise rotation shown)

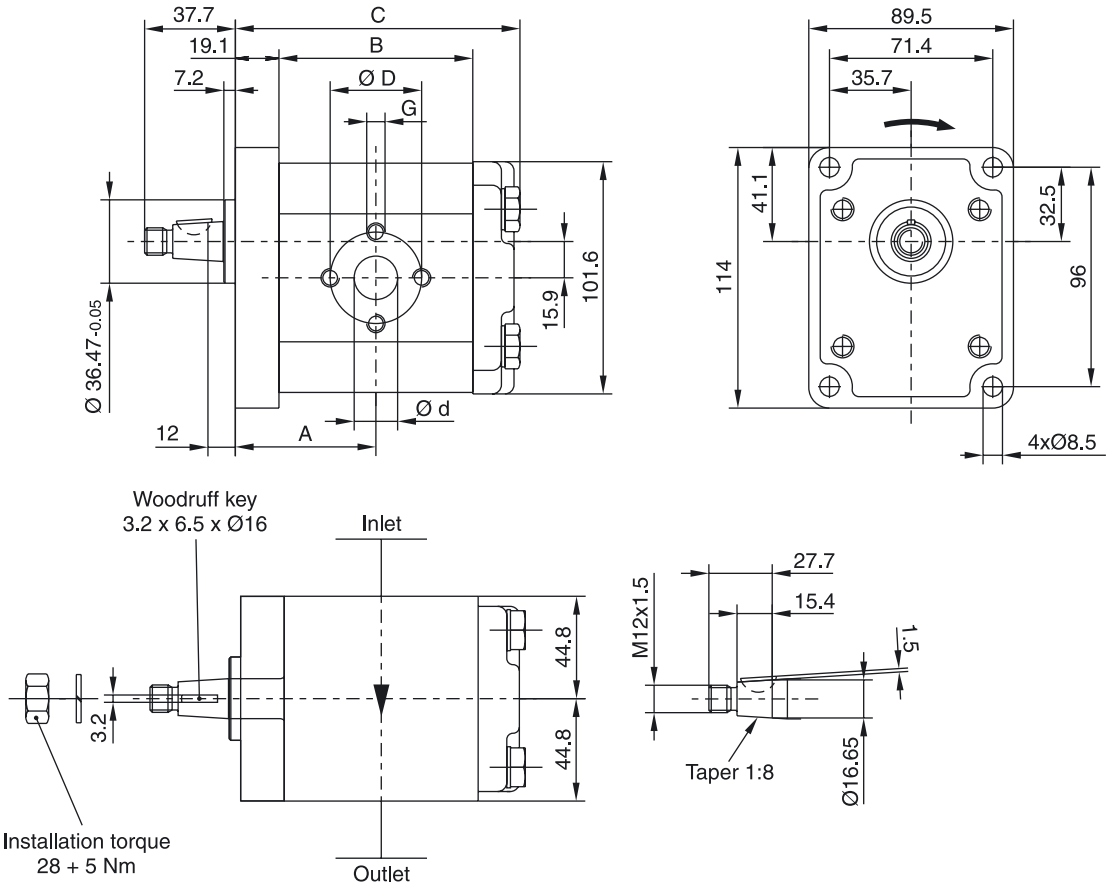

1

PGM511 B XXXX B S2 D3 N SS PP B1 B1 G3 “B” = B (bi-directional)

Displacement		Dimension			Inlet port				Outlet port				Speed of rotation		Working pressure	Order number direction of rotation	
XXXX	cm³/rev	A	B	C	SS	d	D	G	PP	d	D	G	min. rpm	max. rpm	max. bar	bi-directional	
0060	6.0	44.1	50.1	99.2	L1	13	30	M6	L1	13	30	M6	500	3500	250	**334 9219 117**	
0080	8.0	45.7	53.3	102.4	L1	13	30	M6	L1	13	30	M6	500	3500	250	**334 9219 118**	
0110	11.0	48.1	58.0	107.1	L1	13	30	M6	L1	13	30	M6	500	3500	250	**334 9219 119**	
0140	14.0	50.4	62.8	111.9	L2	19	40	M8	L2	19	40	M8	500	3500	250	**334 9219 120**	
0160	16.0	52.0	65.9	115.0	L2	19	40	M8	L2	19	40	M8	500	3500	250	**334 9219 121**	
0190	19.0	54.4	70.6	119.7	L2	19	40	M8	L2	19	40	M8	500	3400	210	**334 9219 122**	
0230	23.0	57.5	76.9	126.0	L2	19	40	M8	L2	19	40	M8	500	2800	210	**334 9219 123**	
0270	27.0	60.7	83.2	132.3	L2	19	40	M8	L2	19	40	M8	500	2400	190	**334 9219 124**	
0310	31.0	63.8	89.5	138.6	L2	19	40	M8	L2	19	40	M8	500	2100	185	**334 9219 125**	
0330	33.0	65.4	92.6	141.7	L2	19	40	M8	L2	19	40	M8	500	2000	185	**334 9219 126**	

Dimensions (bi-directional motor shown)

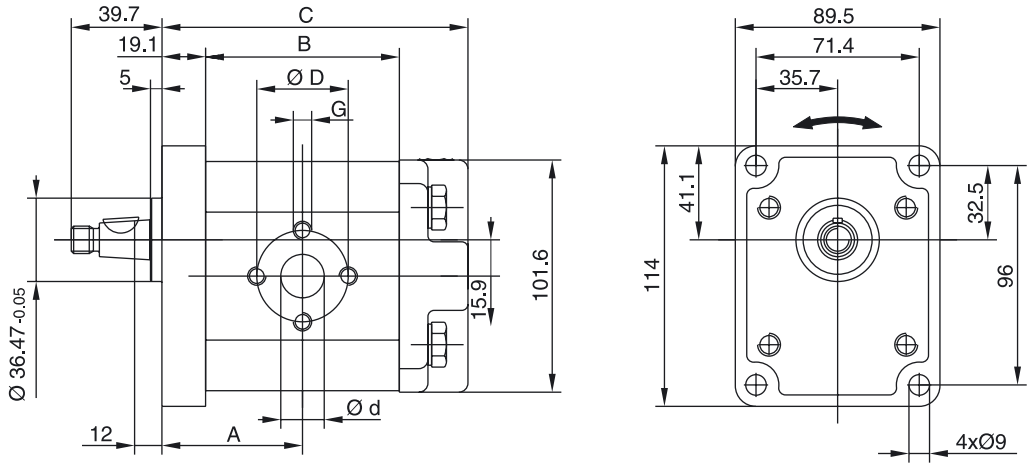

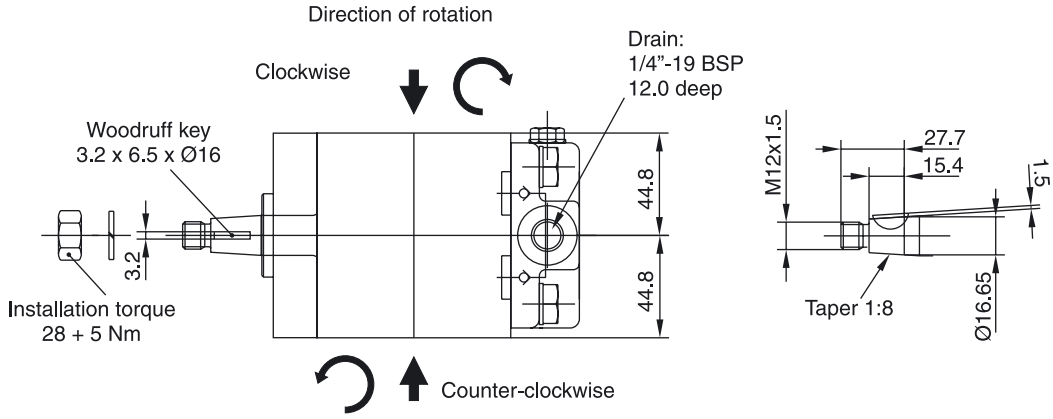

PG		517											B	1	B	1	1)
Gear design	Type		Unit	Dis-place-ment	Rotation	Shaft	Flange	Shaft seal	Inlet side ports option			Outlet side ports option	No rear ports (rear ports on request)				

Code	Type
P	**Pump**
M	Motor

Code	Unit	
	Pump	Motor
A	**Single unit**	**Standard motor w/o checks**
M	Single distributor unit	—
B	Multiple unit	Standard motor w. two checks
C	—	Standard motor w. one anti-cavitation check (ACC)

Displacement	
Code	ccm
0140	**14.0**
0160	**16.0**
0190	**19.0**
0230	**23.0**
0250	**25.0**
0280	**28.0**
0330	**33.0**
0380	**38.0**
0440	**44.0**
0520	**52.0**
0700	70.0

Code	Rotation
C	**Clockwise**
A	Counter-clockwise
B	Bi-directional

Code	Shaft
D1 2)	**13T, 16/32DP, 41.2L, SAE "B" spline**
M1 2)	Ø22.2, 6.3key, no thread, 41.2L, SAE "B", parallel
M2 2)	Ø25.4, 6.3key, no thread, 46L, SAE "B-B", parallel
T1 3)	**Ø21.59, 11.2L, 4.0key, M14x1.5, taper 1:8**

2) Only used with flange H2, H3.
3) Only used with flange D7.

Code	Port options (pumps)
E6E5	1-11 BSP thread/ 3/4-14 BSP thread only from 14ccm to 19ccm
E7E6	1 1/4-11 BSP thread/ 1-11 BSP thread only from 23ccm to 38ccm
E8E6	1 1/2-11 BSP thread/ 1-11 BSP thread only from 44ccm to 70ccm
J9J8	26mm-Ø55mm-M8 square flange 18mm-Ø55mm-M8 square flange only from 14ccm to 52ccm
L3L2	**27mm-Ø51mm-M10 diamond flange 19mm-Ø40mm-M8 diamond flange only from 14ccm to 52ccm**
P3P2	1“-M10 SAE metric flange 3/4“-M10 SAE metric flange only from 16ccm to 23ccm
P4P3	1 1/4“-M10 SAE metric flange 1“-M10 SAE metric flange only from 25ccm to 38ccm
P5P3	1 1/2“-M12 SAE metric flange 1“-M10 SAE metric flange only from 44ccm to 70ccm

Code	Port options (motors)
E6E6	1- 11 BSP thread/ 1 - 11 BSP thread only from 14ccm to 52ccm
L3L3	27mm-Ø51mm-M10 diamond flange 27mm-Ø51mm-M10 diamond flange only from 14ccm to 52ccm
P3P3	1“-M10 SAE metric flange 1“-M10 SAE metric flange only from 16ccm to 52ccm

Example: L3 = inlet port
L2 = outlet port

Code	Shaft seal
X	No seal
N	**NBR**
T 4)	PTFE

4) Must be used for motors.

Code	Flange
D7	**98.4x128.2 - Ø50.77 rectangular**
H2	106.4 - Ø82.55 SAE "A" 2bolt flange
H3	**146.1 - Ø101.06 SAE "B" 2bolt flange**

1) Code of drain line for PGM517 only.
3 Options:
G3 = 1/4-19 BSP top drain.
G4 = 1/4-19 BSP rear drain.
B1 = no drain, product type must be “B“ or “C“.

Bold letters =
Short-term availability

PI PGP-PGM UK.PMD RH

Parker Hannifin GmbH
Hydraulic Controls Division
Kaarst, Germany

1

PGP517 A XXXX Y D1 H3 N L3 L2 B1 B1

"Y" = C (clockwise rotation)
= A (counter-clockwise rotation)

Displacement		Dimension			Inlet port				Outlet port				Speed of rotation		Working pressure	Order number direction of rotation	
XXXX	cm³/rev	A	B	C		d	D	G		d	D	G	min. rpm	max. rpm	max. bar	clockwise	counter-clockwise
0140	14.0	62.1	68.3	122.8	L3	27	51	M10	L2	19	40	M8	500	3400	250	**333 9111 506**	
0160	16.0	63.2	70.3	124.8	L3	27	51	M10	L2	19	40	M8	500	3400	250	**333 9111 507**	
0190	19.0	64.7	73.3	127.8	L3	27	51	M10	L2	19	40	M8	500	3300	250	**333 9111 378**	
0230	23.0	66.7	77.4	131.9	L3	27	51	M10	L2	19	40	M8	500	3300	250	**333 9111 151**	333 9112 113
0250	25.0	67.7	79.4	133.9	L3	27	51	M10	L2	19	40	M8	500	3100	250	**333 9111 061**	333 9112 114
0280	28.0	69.2	82.4	136.9	L3	27	51	M10	L2	19	40	M8	500	3100	250	**333 9111 508**	
0330	33.0	71.7	87.5	142.0	L3	27	51	M10	L2	19	40	M8	500	2600	250	**333 9111 048**	333 9112 080
0380	38.0	74.3	92.5	147.0	L3	27	51	M10	L2	19	40	M8	500	2300	250	**333 9111 004**	333 9112 102
0440	44.0	77.3	98.6	153.1	L3	27	51	M10	L2	19	40	M8	500	2000	220	**333 9111 106**	333 9112 115
0520	52.0	81.3	106.7	161.2	L3	27	51	M10	L2	19	40	M8	500	1700	200	**333 9111 509**	333 9112 151

Dimensions (clockwise rotation shown)

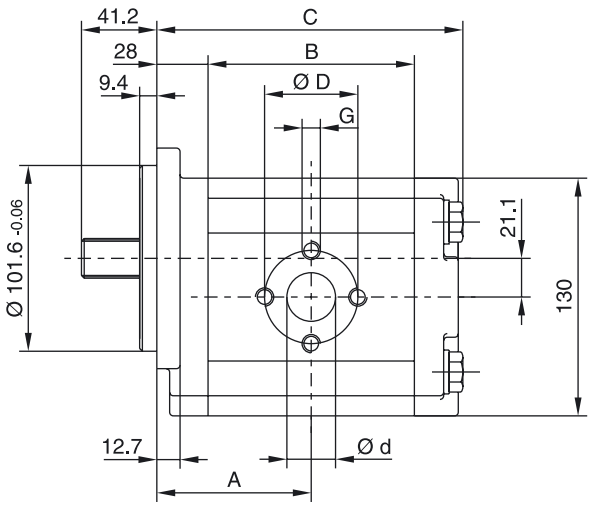

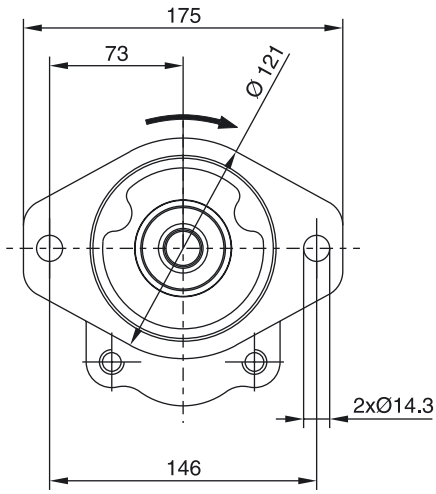

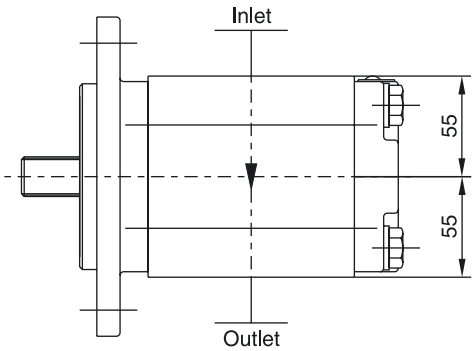

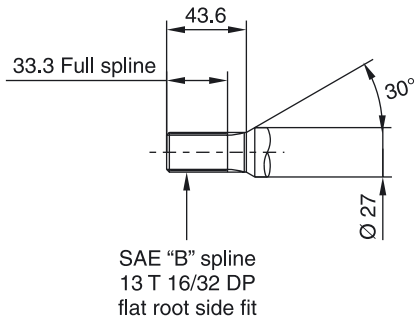

PGP517 A XXXX Y T1 D7 N L3 L2 B1 B1

"Y" = C (clockwise rotation)
= A (counter-clockwise rotation)

Displacement		Dimension			Inlet port				Outlet port				Speed of rotation		Working pressure	Order number direction of rotation	
XXXX	cm³/rev	A	B	C		d	D	G		d	D	G	min. rpm	max. rpm	max. bar	clockwise	counter-clockwise
0140	14.0	62.1	68.3	122.8	L3	27	51	M10	L2	19	40	M8	500	3400	250	**333 9111 503**	
0160	16.0	63.2	70.3	124.8	L3	27	51	M10	L2	19	40	M8	500	3400	250	**333 9111 505**	
0190	19.0	64.7	73.3	127.8	L3	27	51	M10	L2	19	40	M8	500	3300	250	**333 9111 285**	333 9112 212
0230	23.0	66.7	77.4	131.9	L3	27	51	M10	L2	19	40	M8	500	3300	250	**333 9111 119**	333 9112 213
0250	25.0	67.7	79.4	133.9	L3	27	51	M10	L2	19	40	M8	500	3100	250	**333 9111 047**	333 9112 068
0280	28.0	69.2	82.4	136.9	L3	27	51	M10	L2	19	40	M8	500	3100	250	**333 9111 287**	333 9112 214
0330	33.0	71.7	87.5	142.0	L3	27	51	M10	L2	19	40	M8	500	2600	250	**333 9111 014**	333 9112 035
0380	38.0	74.3	92.5	147.0	L3	27	51	M10	L2	19	40	M8	500	2300	250	**333 9111 015**	333 9112 036
0440	44.0	77.3	98.6	153.1	L3	27	51	M10	L2	19	40	M8	500	2000	220	**333 9111 046**	333 9112 040
0520	52.0	81.3	106.7	161.2	L3	27	51	M10	L2	19	40	M8	500	1700	200	**333 9111 242**	333 9112 215

Dimensions (clockwise rotation shown)

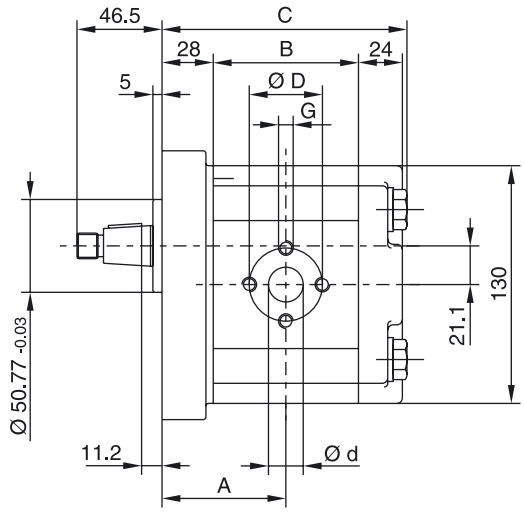

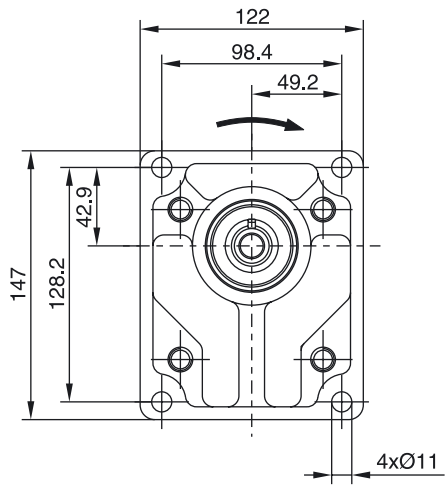

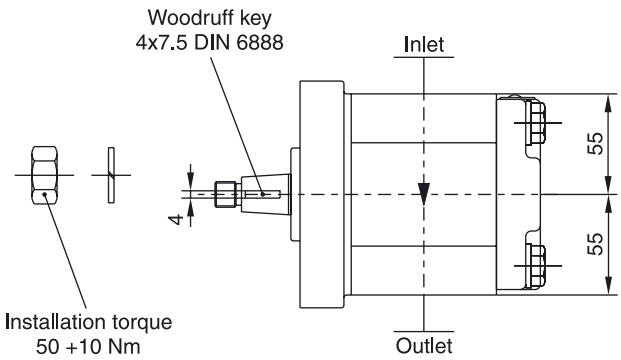

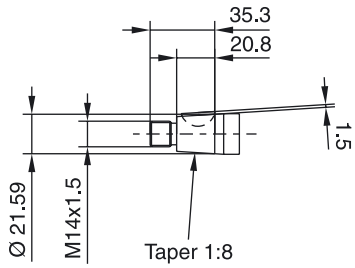

1

Code for multiple units

PGP	511	B	0160	C	S2	D3	N	L2	L1	S	–
	see single unit		**Displacement**	**Rotation**	**Shaft code**	**Flange code**	**Shaft seal** front unit	**Inlet side port**	**Outlet side port**		

Product type
B = Multiple pump
N = Multiple distributor pump (only for PGP505, PGP511 and PGP517)

Section connection
S = Separate inlets
C = Common inlet (For common inlet, the other (second) inlet port must be coded B1.)

511	A	0110	X	L2	L1	B1	B1
	Product type [1]	**Displacement**	**Shaft seal** between sect.	**Inlet side port**	**Outlet side port**	**Inlet rear port**	**Outlet rear port**

[1] Further B possible for triple units

This coding system can be used for all pumps series 500.

Over many years Parker Hydraulics has supplied gear pumps and motors for mobile and industrial markets worldwide, especially for materials handling, commercial grass cutting and construction equipment applications. Many Parker pumps and motors have been developed and tested for the specific needs of these industries.

Parker's defined strategy to provide engineered solutions, coupled with an award winning flexible manufacturing system, has resulted in a wide range of SAE/DIN/ European and other special options being available as standard.

Features

- Patented interlocking body design
- 12 tooth gears, bronze balance plates
- Tandem, triple and cross-frame pumps available
- Common inlets available for tandem and triple pumps
- Continuous operating pressures up to 310 bar
- Production run-in available to suite OEM application conditions and to provide optimized volumetric efficiencies
- Pressure balanced design for high efficiency
- Reduced system noise levels compared to earlier models
- High power through-drive capability
- Wide range of integral valves for power steering, power brakes, fan drivers and implement hydraulics
- Load sense and solenoid operated unloading valves
- Low noise version as "stealth" pump

Technical data

Pump type	Heavy-duty, cast iron, external gear.
Mounting	SAE, rectangular, specials on request.
Ports	SAE and metric split flanges and others.
Shaft style	SAE splined, keyed, tapered, cylindrical. Specials on request
Speed	500 - 3500 rpm, see tables.
Theor. displacement	See tables
Drive	Drive direct with flexible coupling is recommended.
Inlet pressure	Operating range 0.8 to 2 bar abs. Min. inlet pressure 0.5 bar short time without load, consultation is recommended. Outlet pressure see tables
Axial / radial load	Axial or radial loading is not allowed.
Hydraulic fluids	Mineral oil Fire resistant fluids: - water-oil emulsions 60/40, HFB - water-glycol, HFC - phosphate-esters, HFD Consultation is recommended.
Fluid temperature	Range of operating temperature -15 ... +80°C. Max. permissible operating pressure depending on fluid temperature. Temperature for cold start -20 to -15°C at speed ≤ 1500 rpm.

Fluid viscosity	Range of operating viscosity 20 to 100 mm²/s. Max. operating viscosity should not exceed 1600 mm²/s recommended min. viscosity 8 mm²/s.
Filtration	According to ISO 4406 Cl. 16/13
Direction of rotation (looking at shaft)	Clockwise, counter-clockwise or double. Attention! Drive pump only in indicated drive direction of rotation.
Multiple pump assemblies	• Available in two or three section configurations. • Max. shaft loading must conform to the limitations shown in the shaft load rating table in this catalogue. • The max. load is determined by adding the torque values for each pumping section that will be simultaneously loaded.
Separate or common inlet capability	Separate Inlet configuration: Each gear housing has individual inlet and outlet ports. Common Inlet configuration: Two gear sets share a common inlet.

1

PG		620											B	1	B	1	1)
Gear design	Type		Unit	Dis-place-ment	Rotation	Shaft	Flange	Shaft seal	Inlet side ports option		Outlet side ports option		No rear ports (rear ports on request)				

Code	Type
P	Pump
M	Motor

Code	Unit	
	Pump	Motor
A	Single unit	Standard motor w/o checks
B	Multiple unit	Standard motor w. two checks
C	—	Standard motor w. one anti-cavitation check (ACC)

Displacement	
Code	ccm
0160	16.0
0190	19.0
0210	21.0
0230	23.0
0280	28.0
0290	29.0
0330	33.0
0360	36.0
0370	37.0
0410	41.0
0440	44.0
0460	46.0
0500	50.0
0520	52.0

Code	Rotation
C	Clockwise
A	Counter-clockwise
B	Bi-directional

Code	Shaft
C1 2)	11T, 16/32DP, 38.2L, SAE 19-4 spline
D1 2)	13T, 16/32DP, 41.2L, SAE "B" spline
T1 3)	Ø21.59, 11.2L, 4.0key, M14x1.5, taper 1:8

2) Only used with flange H2, H3.
3) Only used with flange D7.

Code	Port options (pumps)
E6E5	1-11 BSP thread/ ¾-14 BSP thread only from 14ccm to 21ccm
E7E5	1¼-11 BSP thread/ ¾-14 BSP thread only from 23ccm to 52ccm
L3L2	27mm-Ø51mm-M10 diamond flange 19mm-Ø40mm-M8 diamond flange only from 29ccm to 52ccm
T4T3	1¼"-M10 SAE metric flange 1"-M10 SAE metric flange only from 16ccm to 33ccm
T5T3	1½"-M12 SAE metric flange 1"-M10 SAE metric flange only from 36ccm to 52ccm
Code	**Port options (motors)**
E6E6	1 - 11 BSP thread/ 1 - 11 BSP thread only from 16ccm to 33ccm
E7E7	1¼"-11 BSP thread/ 1¼"-11 BSP thread only from 36ccm to 52ccm

Example: T4 = inlet port
T3 = outlet port

Code	Shaft seal
X	No seal
N	NBR
H 4)	High pressure (5bar)

4) for motors recommended

Code	Flange
D7	98.4x128.2 - Ø50.77 rectangular
H2	106.4 - Ø82.55 SAE "A" 2bolt flange
H3	146.1 - Ø101.06 SAE "B" 2bolt flange
A4	114.5 x 114.5 - Ø127 SAE "C" 4bolt square

1) Code of drain line for PGM620 only.
2 Options:
G4 = 1/4-19 BSP rear drain.
B1 = no drain, product type must be "B" or "C".

PI PGP-PGM UK.PMD RH

Parker Hannifin GmbH
Hydraulic Controls Division
Kaarst, Germany

PGP 620 - 16.0 CC

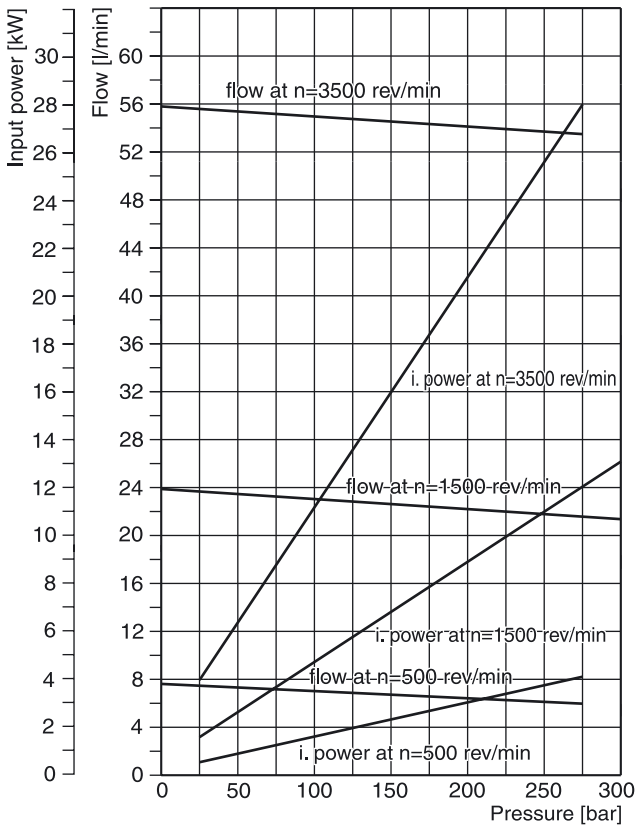

PGP 620 - 26.0 CC

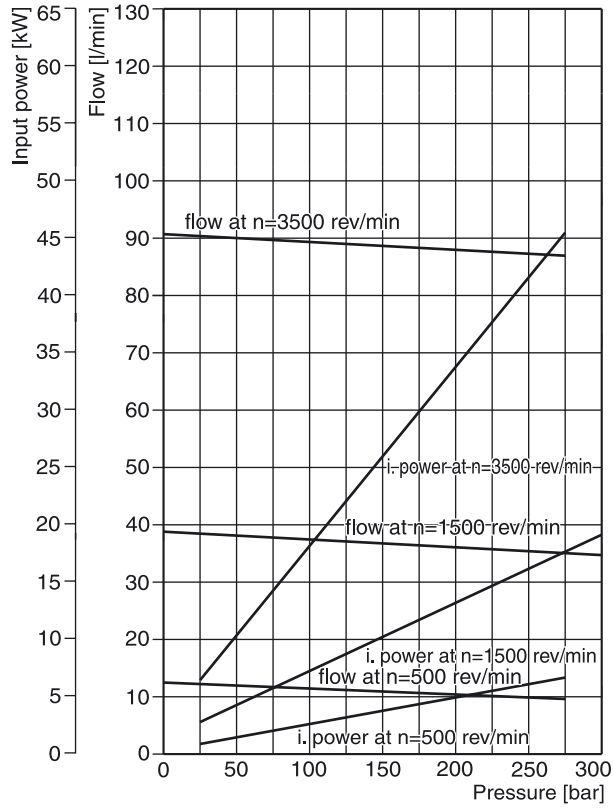

PGP 620 - 41.0 CC

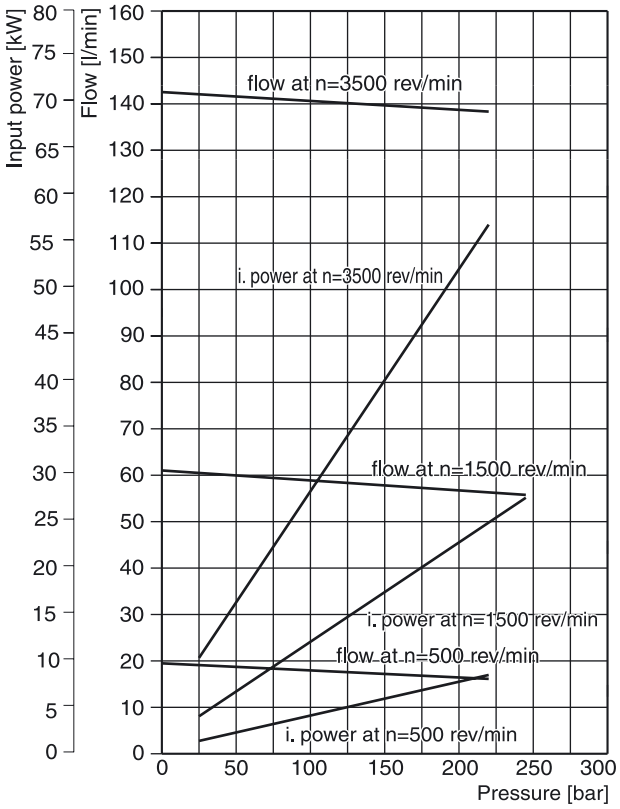

PGP 620 - 52.0 CC

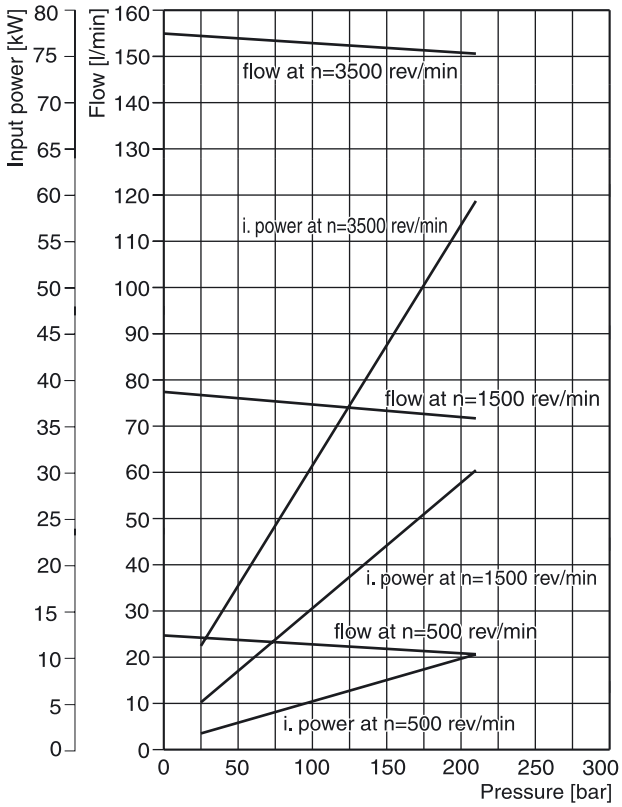

Fluid temperature: 45± 2°C ; Viscosity: 36mm^2/s ; Inlet pressure: 0.9 + 0.1 bar absolute

PI PGP-PGM UK.PMD RH

Parker Hannifin GmbH
Hydraulic Controls Division
Kaarst, Germany

1

PGP620 A XXXX Y D1 H3 N SS PP B1 B1

"Y" = C (clockwise rotation)
= A (counter-clockwise rotation)

Displacement		Dimension		Inlet port		Outlet port		Speed of rotation		Working pressure	Order number direction of rotation	
XXXX	cm³/rev	A	B		G		G	min. rpm	max. rpm	max. bar	clockwise	counter-clockwise
0160	16	79.2	122.7	E6	1"-11	E5	¾"-14	500	3000	275	702 9111 052	702 9112 053
0190	19	82.5	126.0	E6	1"-11	E5	¾"-14	500	3000	275		
0210	21	84.7	128.2	E6	1"-11	E5	¾"-14	500	3000	275		
0230	23	86.9	130.4	E6	1"-11	E5	¾"-14	500	2700	275	702 9111 098	702 9112 054
0260	26	90.2	133.7	E6	1"-11	E5	¾"-14	500	2400	275	702 9111 112	702 9112 038
0290	29	93.5	137.0	E7	1¼"-11	E5	¾"-14	500	3000	275		
0330	33	97.9	141.4	E7	1¼"-11	E5	¾"-14	500	3000	275		
0360	36	101.2	144.7	E7	1¼"-11	E5	¾"-14	500	2900	250		
0370	37	102.3	145.8	E7	1¼"-11	E5	¾"-14	500	2900	250		702 9112 046
0410	41	106.7	150.2	E7	1¼"-11	E5	¾"-14	500	2600	220		
0440	44	110.0	153.5	E7	1¼"-11	E5	¾"-14	500	2400	210		
0460	46	112.2	155.7	E7	1¼"-11	E5	¾"-14	500	2300	210		702 9112 047
0500	50	116.6	160.1	E7	1¼"-11	E5	¾"-14	500	2100	210	702 9111 096	702 9112 048
0520	52	118.8	162.3	E7	1¼"-11	E5	¾"-14	500	2000	210	702 9111 094	702 9112 039

Dimensions (clockwise rotation shown)

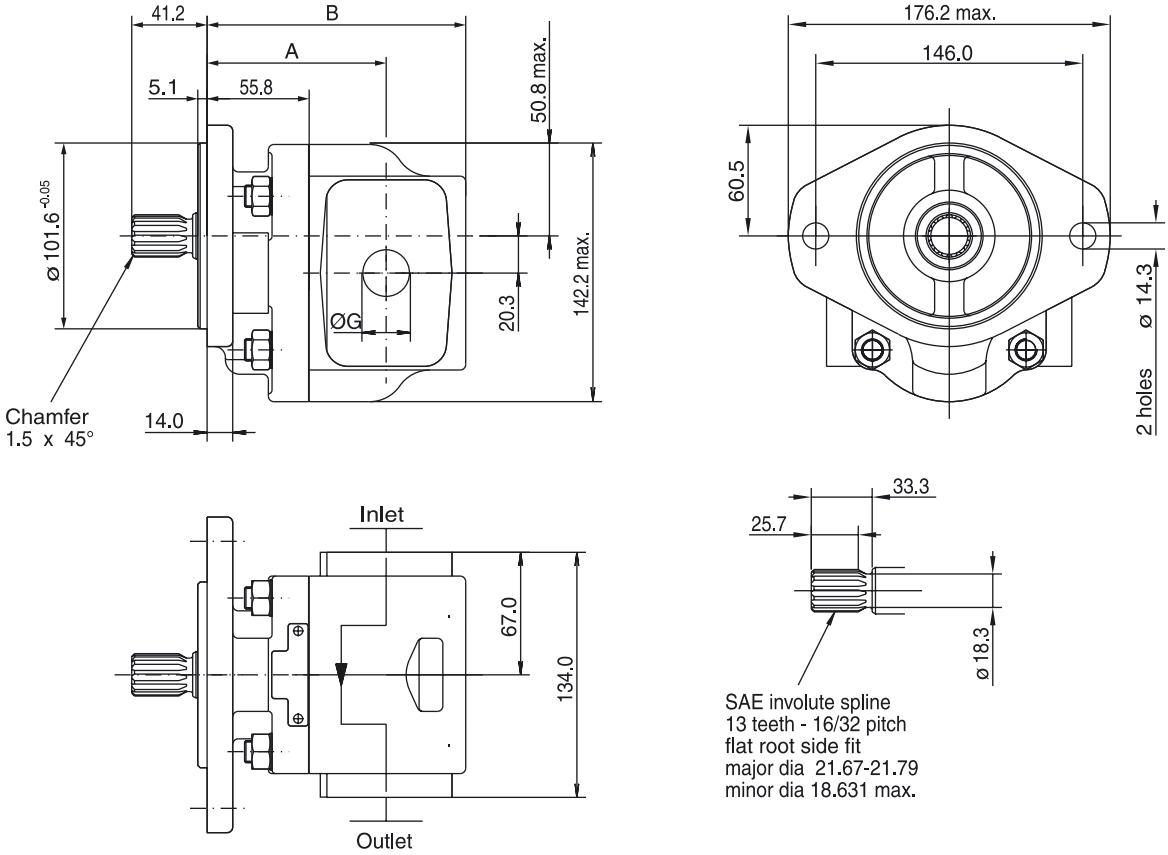

PGP620 A XXXX Y T1 D7 N SS PP B1 B1

"Y" = C (clockwise rotation)
= A (counter-clockwise rotation)

Displacem.		Dimension		Inlet port				Outlet port				Speed of rotation		Working pressure	Order number direction of rotation	
XXXX	cm³/ rev	A	B	SS	d	D	G	SS	d	D	G	min. rpm	max. rpm	max. bar	clockwise	counter-clockw.
0160	16	79.2	122.7	L1	13	30	M6	L1	13	30	M6	500	1500	275	702 9111 031	
0190	19	82.5	126.0	L2	19	40	M8	L2	13	30	M8	500	2300	275	702 9111 032	
0210	21	84.7	128.2	L2	19	40	M8	L2	13	30	M8	500	2000	275		
0230	23	86.9	130.4	L2	19	40	M8	L2	13	30	M8	500	1900	275	702 9111 033	
0260	26	90.2	133.7	L2	19	40	M8	L2	13	30	M8	500	1600	275	702 9111 034	
0290	29	93.5	137.0	L3	27	51	M10	L2	13	30	M8	500	3000	275	702 9111 021	
0330	33	97.9	141.4	L3	27	51	M10	L2	13	30	M8	500	2600	275	702 9111 020	
0360	36	101.2	144.7	L3	27	51	M10	L2	13	30	M8	500	2400	250	702 9111 082	
0370	37	102.3	145.8	L3	27	51	M10	L2	13	30	M8	500	2300	250	702 9111 014	
0410	41	106.7	150.2	L3	27	51	M10	L2	13	30	M8	500	2100	220	702 9111 019	
0440	44	110.0	153.5	L3	27	51	M10	L2	13	30	M8	500	2000	210	702 9111 018	
0460	46	112.2	155.7	L3	27	51	M10	L2	13	30	M8	500	1900	210		
0500	50	116.6	160.1	L3	27	51	M10	L2	13	30	M8	500	1700	210	702 9111 017	
0520	52	118.8	162.3	L3	27	51	M10	L2	13	30	M8	500	1700	210		

Dimensions (clockwise rotation shown)

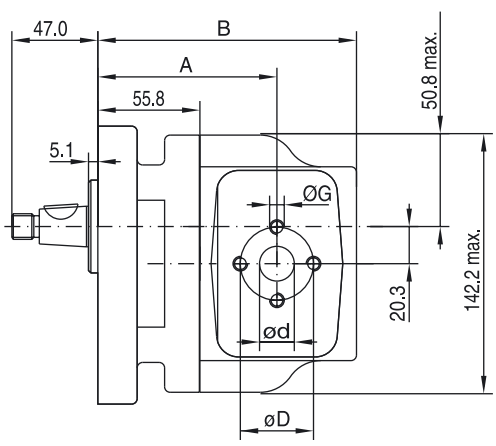

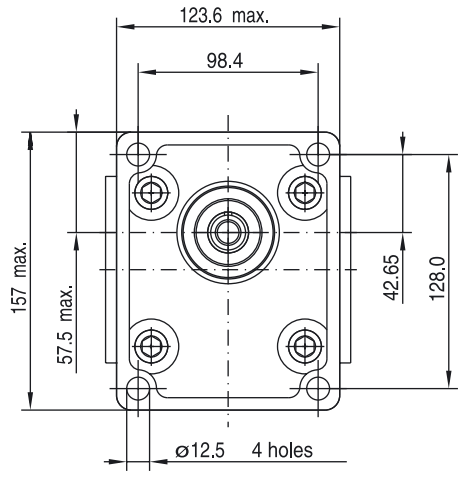

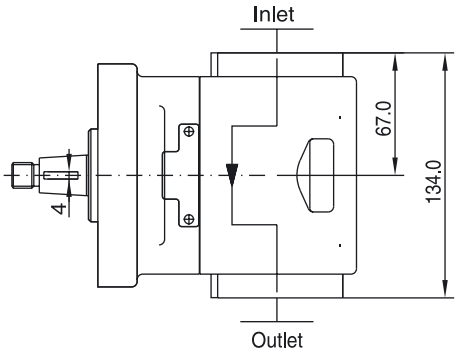

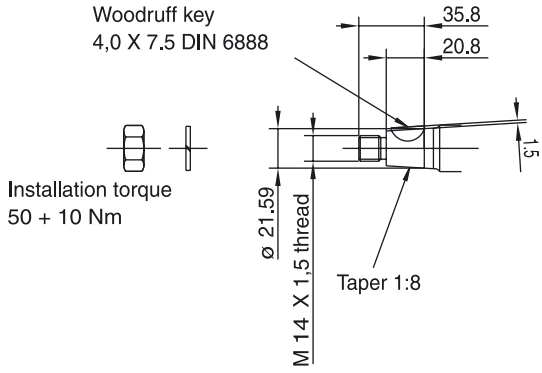

1

PG		640										B	1	B	1
Gear design	Type		Unit	Dis-place-ment	Rotation	Shaft	Flange	Shaft seal	Inlet side ports option		Outlet side ports option	No rear ports (rear ports on request)			

Code	Type
P	Pump
M [1]	Motor

[1] Available from 2005

Code	Unit
A	Single unit
B	Multiple unit

Displacement	
Code	ccm
0300	30.0
0350	35.0
0400	40.0
0450	45.0
0500	50.0
0550	55.0
0600	60.0
0650	65.0
0700	70.0
0750	75.0
0800	80.0

Code	Rotation
C	Clockwise
A	Counter-clockwise

Code	Shaft
D1 [2]	13T, 16/32DP, 41.2L, SAE "B" spline
E1 [2]	15T, 16/32DP, 46.0L, SAE "B-B" spline
E4 [3]	14T, 12/24DP, 55.6L, SAE "C" spline

[2] Only used with flange A3, H3.
[3] Only used with flange A4, K3.

Code	Port options (pumps)
E8E7	1½ -11 BSP Thread / 1¼ -11 BSP Thread only from 30ccm to 50ccm
S4S3	1¼“ - 7/16-14 UNC SAE split flange 1“ - 3/8-16 UNC SAE split flange only from 30ccm to 40ccm
S5S3	1½“ - ½-13 UNC SAE split flange 1“ - 3/8-16 UNC SAE split flange only from 45ccm to 55ccm
S6S3	2“ - ½-13 UNC SAE split flange 1“ - 3/8-16 UNC SAE split flange only for 60ccm
S6S4	2“ - ½-13 UNC SAE split flange 1¼“ - 7/16-14 UNC SAE split flange only from 65ccm to 80ccm
T4T3	1¼“ - M10 SAE metr. split flange 1“ - M10 SAE split flange only from 30ccm to 40ccm
T5T3	1½“ - M12 SAE metr. split flange 1“ - M10 SAE split flange only from 45ccm to 55ccm
T6T3	2“ - M12 SAE metr. split flange 1¼“ - M10 SAE metr. split flange only for 60ccm
T6T4	2“ - M12 SAE metr. split flange 1¼“ - M10 SAE metr. split flange only from 65ccm to 80ccm

Example: T5 = inlet port
T4 = outlet port

Code	Shaft seal
X	No seal
N	NBR

Code	Flange
A3	89.8x89.8 - Ø101.06 4bolt square flange
A4	114.5x114.5 - Ø127 SAE "C" 4bolt square flange
H3	146.1 - Ø101.06 SAE "B" 2bolt flange
K3	181.0 - Ø127 SAE "C" 2bolt flange

PGP 640 - 30.0 CC

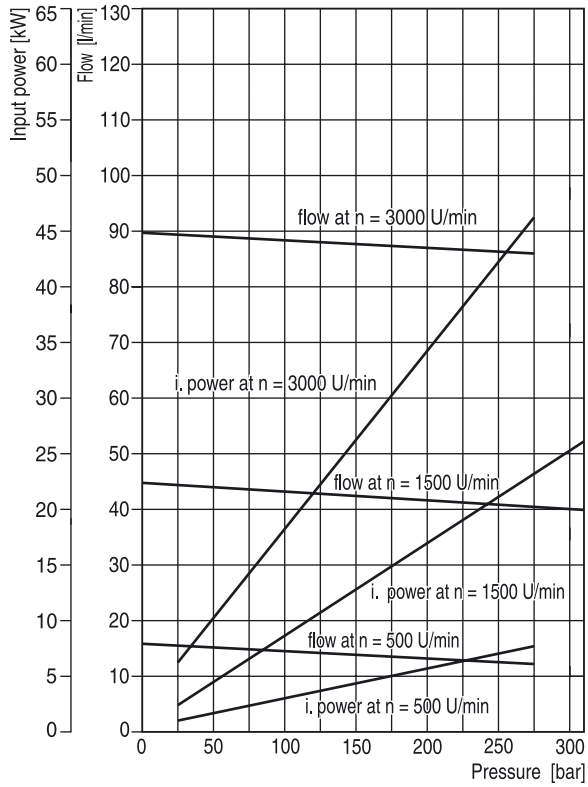

PGP 640 - 50.0 CC

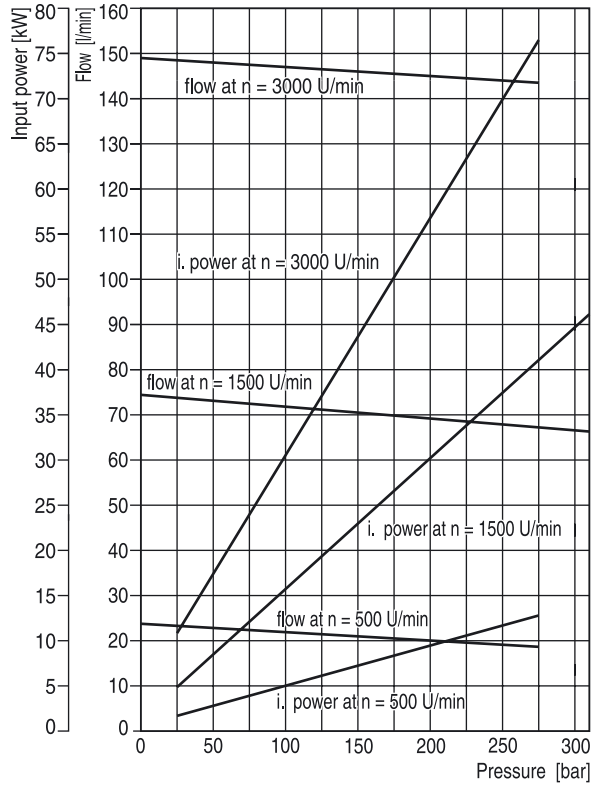

PGP 640 - 65.0 CC

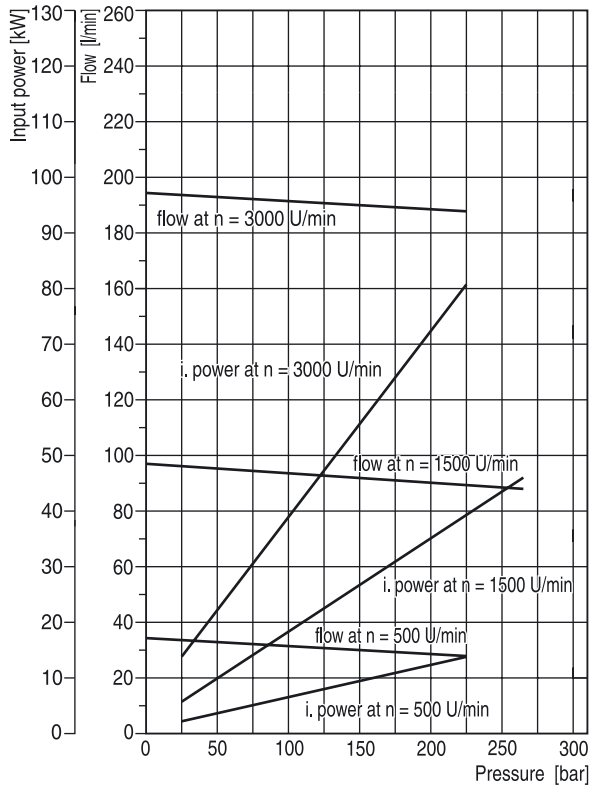

PGP 640 - 80.0 CC

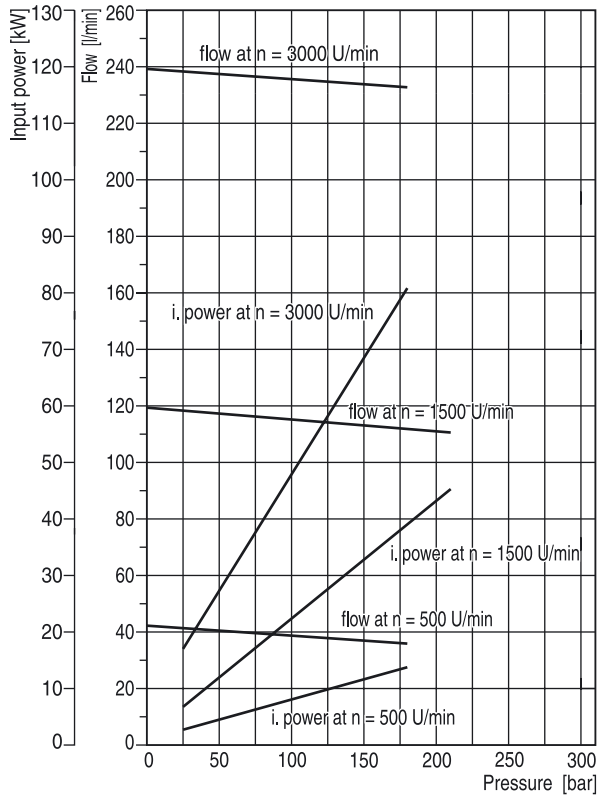

Fluid temperature: 45± 2°C ; Viscosity: 36mm^2/s ; Inlet pressure: 0.9 + 0.1 bar absolute

PI PGP-PGM UK.PMD RH

Parker Hannifin GmbH
Hydraulic Controls Division
Kaarst, Germany

1

PGP640 A XXXX Y D1 H3 N SS PP B1 B1

"Y" = C (clockwise rotation)
= A (counter-clockwise rotation)

Displacement		Dimension		Inlet port		Outlet port		Speed of rotation		Working pressure	Order number direction of rotation	
XXXX	cm³/rev	A	B		G		G	min. rpm	max. rpm	max. bar	clockwise	counter-clockwise
0300	30	128.6	176.1	T4	1-¼"	T3	1"	500	3000	310		
0350	35	128.6	176.1	T4	1-¼"	T3	1"	500	3000	310		
0400	40	131.8	182.7	T4	1-¼"	T3	1"	500	3000	310		
0450	45	131.8	182.7	T5	1-½"	T3	1"	500	3000	310		
0500	50	135.6	189.3	T5	1-½"	T3	1"	500	3000	310		
0550	55	135.6	189.3	T5	1-½"	T3	1"	500	3000	310		
0600	60	138.4	195.8	T6	2"	T3	1"	500	3000	290		
0650	65	138.4	195.8	T6	2"	T4	1-¼"	500	3000	265		
0700	70	142.2	203.2	T6	2"	T4	1-¼"	500	3000	245		
0750	75	142.2	203.2	T6	2"	T4	1-¼"	500	3000	225		
0800	80	142.2	203.2	T6	2"	T4	1-¼"	500	3000	210		

Dimensions (clockwise rotation shown)

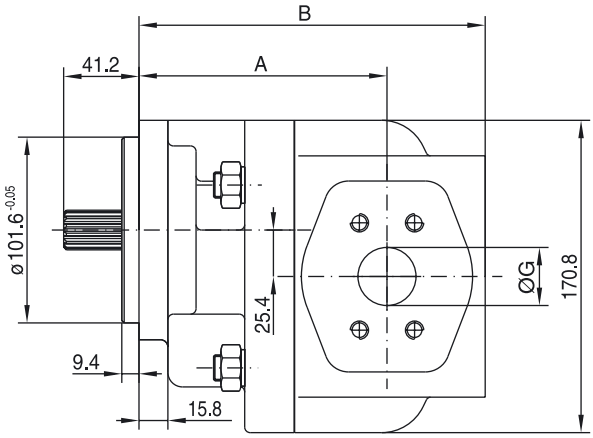

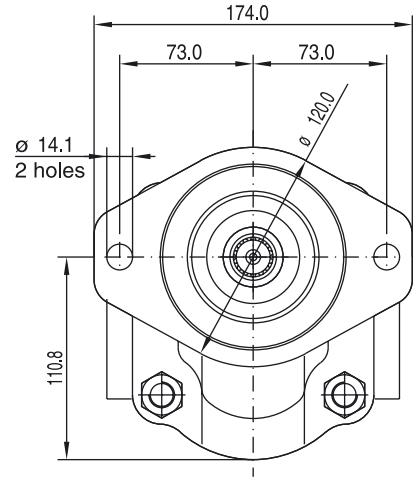

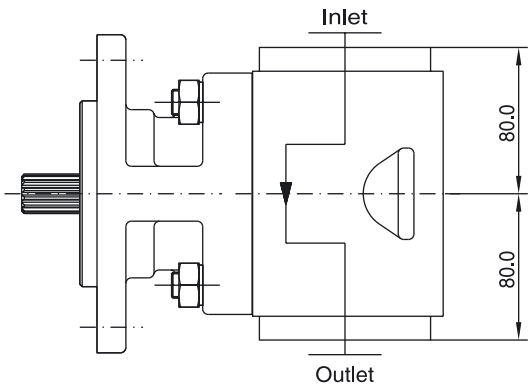

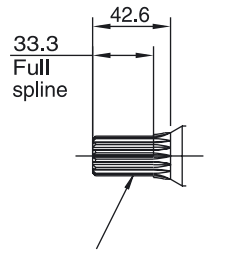

SAE involute spline
13 teeth - 16/32 pitch
flat root side fit
major dia 21.67-21.79
minor dia 18.631 max.

PGP640 A XXXX Y E4 A4 N SS PP B1 B1

"Y" = C (clockwise rotation)
= A (counter-clockwise rotation)

Displacement		Dimension		Inlet port		Outlet port		Speed of rotation		Working pressure	Order number direction of rotation	
XXXX	cm³/rev	A	B		G		G	min. rpm	max. rpm	max. bar	clockwise	counter-clockwise
0300	30	128.6	176.1	T4	1-¼"	T3	1"	500	3000	310		
0350	35	128.6	176.1	T4	1-¼"	T3	1"	500	3000	310		
0400	40	131.8	182.7	T4	1-¼"	T3	1"	500	3000	310		
0450	45	131.8	182.7	T5	1-½"	T3	1"	500	3000	310		
0500	50	135.6	189.3	T5	1-½"	T3	1"	500	3000	310		
0550	55	135.6	189.3	T5	1-½"	T3	1"	500	3000	310		
0600	60	138.4	195.8	T6	2"	T3	1"	500	3000	290		
0650	65	138.4	195.8	T6	2"	T4	1-¼"	500	3000	265		
0700	70	142.2	203.2	T6	2"	T4	1-¼"	500	3000	245		
0750	75	142.2	203.2	T6	2"	T4	1-¼"	500	3000	225		
0800	80	142.2	203.2	T6	2"	T4	1-¼"	500	3000	210		

Dimensions (clockwise rotation shown)

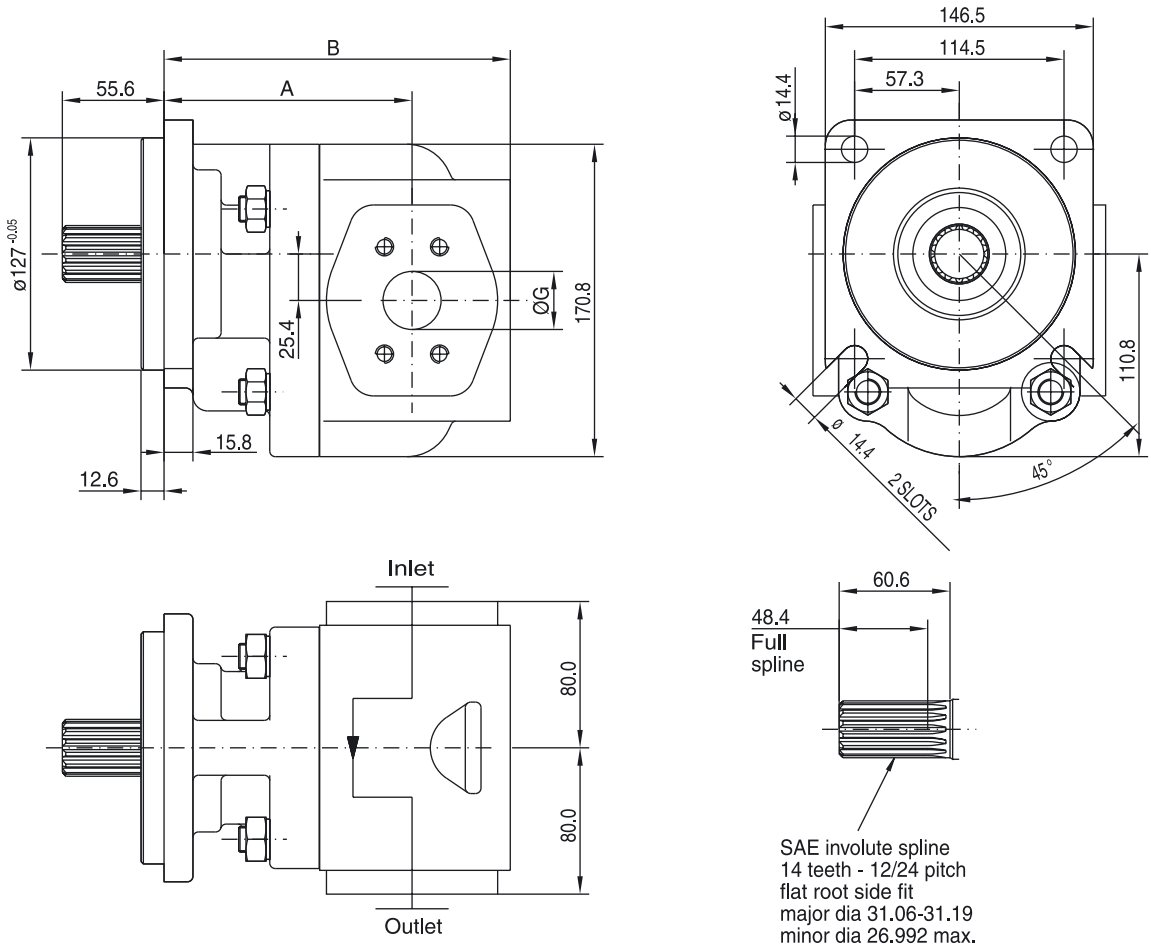

1

PGP640 A XXXX Y E4 K3 N SS PP B1 B1

"Y" = C (clockwise rotation)
= A (counter-clockwise rotation)

Displacement		Dimension		Inlet port		Outlet port		Speed of rotation		Working pressure	Order number direction of rotation	
XXXX	cm³/rev	A	B		G		G	min. rpm	max. rpm	max. bar	clockwise	counter-clockwise
0300	30	128.6	176.1	T4	1-¼"	T3	1"	500	3000	310		
0350	35	128.6	176.1	T4	1-¼"	T3	1"	500	3000	310		
0400	40	131.8	182.7	T4	1-¼"	T3	1"	500	3000	310		
0450	45	131.8	182.7	T5	1-½"	T3	1"	500	3000	310		
0500	50	135.6	189.3	T5	1-½"	T3	1"	500	3000	310		
0550	55	135.6	189.3	T5	1-½"	T3	1"	500	3000	310		
0600	60	138.4	195.8	T6	2"	T3	1"	500	3000	290		
0650	65	138.4	195.8	T6	2"	T4	1-¼"	500	3000	265		
0700	70	142.2	203.2	T6	2"	T4	1-¼"	500	3000	245		
0750	75	142.2	203.2	T6	2"	T4	1-¼"	500	3000	225		
0800	80	142.2	203.2	T6	2"	T4	1-¼"	500	3000	210		

Dimensions (clockwise rotation shown)

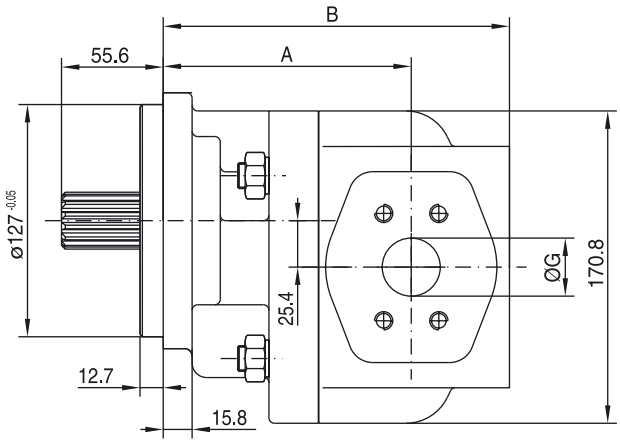

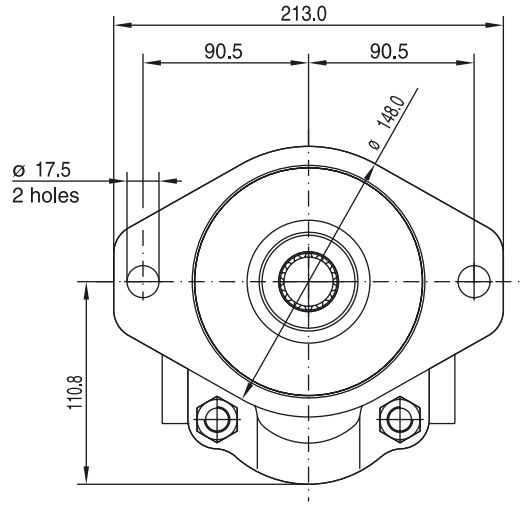

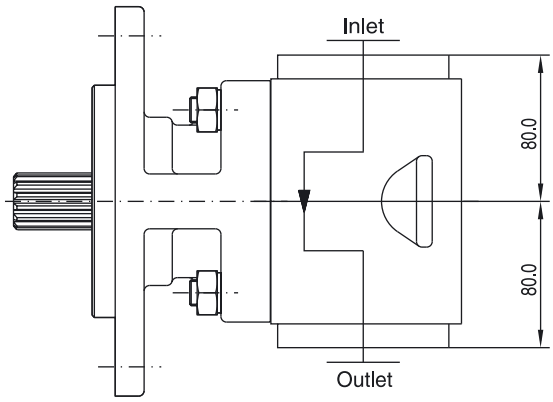

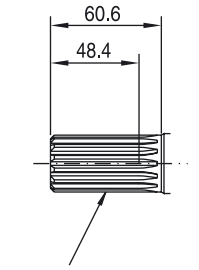

SAE involute spline
14 teeth - 12/24 pitch
flat root side fit
major dia 31.06-31.19
minor dia 26.992 max.

Code for multiple units

PGP	620	B	0330	C	D1	H3	N	T4	T3	S	–
see single unit			**Displacement**	**Rotation**	**Shaft code**	**Flange code**	**Shaft seal** front unit	**Inlet side port**	**Outlet side port**		

Product type
B = Multiple pump
N = Multiple distributor pump

Section connection
S = Separate inlets
C = Common inlet (For common inlet, the other (second) inlet port must be coded B1.)

620	A	0260	X	T4	T3	B1	B1
	Product type [1]	**Displacement**	**Shaft seal** between sect.	**Inlet side port**	**Outlet side port**	**Inlet rear port**	**Outlet rear port**

[1] Further B possible for triple units

This coding system can be used for all pumps series 600.

Quality pays

Aluminium or cast-iron bodied 'split-gear' gear pumps are designed for high pressure and speed ratings together with high efficiency and optimised noise levels.

The flow pulsation is considerably decreased by phased dual element gear sets, resulting in models with clearly lower noise levels. Common inlet available for multiple section units.

Series 500

- Up to 275 bar constant operation possible due to high-quality materials
- Low noise levels even in constant operation
- High efficiency thanks to precise manufacturing
- Complete product range for huge variety of applications
- Common inlet ports for double and triple pumps
- Wide choice of integrated valves, e.g. load-sensing and solenoid types
- Full range of proven motors available

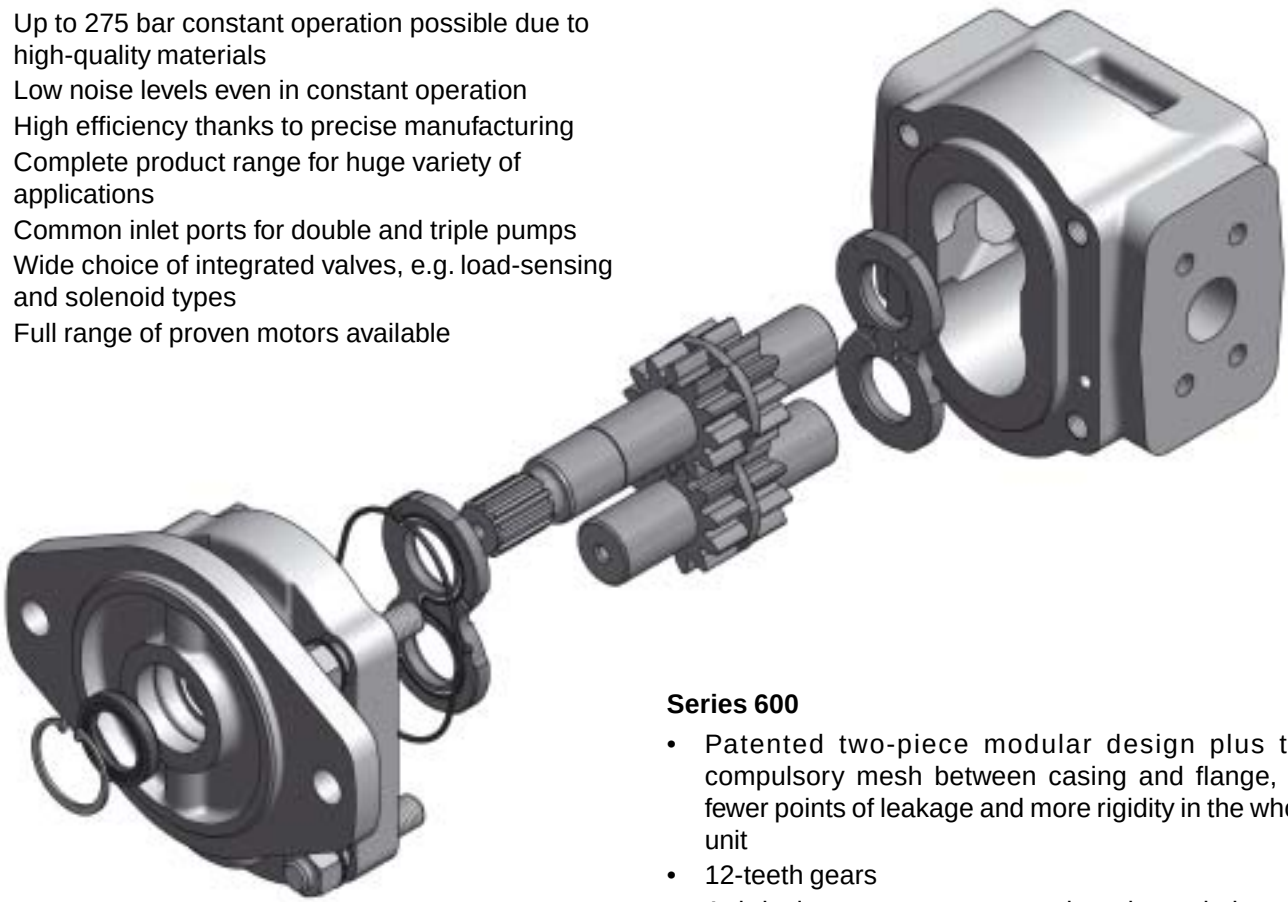

Series 600

- Patented two-piece modular design plus the compulsory mesh between casing and flange, for fewer points of leakage and more rigidity in the whole unit
- 12-teeth gears
- Axial clearance compensation through bronze pressure plates for high all-over efficiency
- Double or triple pumps possible
- Stackable with other products
- Common inlet ports for double and triple pumps available
- Constant pressure up to 310 bar admissible
- Wide range of integrated valves, e.g. relief valves, priority flow dividers, unloader valves
- Load-sensing and solenoid valves available
- Full range of robust motors available for high-demand applications

Shaft loads PGP/PGM500

Code	Description	Type	Torque rating [Nm]			
			PGP/PGM503	PGP/PGM505	PGP/PGM511	PGP/PGM517
H1	Ø10.0, 3.0 key, no thread, 36L	parallel	30	—	—	—
P2	Ø9.95, 8.8L, 2.4 key, M6	taper 1:8	30	—	—	—
V1	5 x 6.5 long shaft w/o coupling	tang drive	20	—	—	—
V2	5 x 4.5 short shaft w/o coupling	tang drive	20	—	—	—
A1	9T, 16/32DP, 32L, SAE "A"	splined	—	108	—	—
J1	Ø12.7, 3.2 key, no thread, 38L	parallel	—	43	—	—
K1	Ø15.88, 4.0 key, no thread, 32L, SAE "A"	parallel	—	85	—	—
Q2	Ø14.25, 5.5L, 3.0 key, M10x1	taper 1:8	—	68	—	—
A1	9T, 16/32DP, 32L, SAE "A"	splined	—	—	86	—
C1	11T, 16/32DP, 38.2L, SAE 19-4	splined	—	—	184	—
F1	9T, B17x14.23L, DIN 5482	splined	—	—	101	—
K1	Ø15.88, 4.0 key, no thread, 32L, SAE "A"	parallel	—	—	75	—
L6	Ø19.05, 4.8 key, no thread, 32L, SAE 19-1	parallel	—	—	145	—
S1	Ø17.0, 7.7L, 3.0 key, M12x1.5	taper 1:5	—	—	193	—
S2	Ø16.65, 12.0L, 3.2 key, M12x1.5	taper 1:8	—	—	198	—
S4	Ø16.65, 12.0L, 4.0 key, M12x1.5	taper 1:8	—	—	198	—
D1	13T, 16/32DP, 41.2L, SAE "B"	splined	—	—	—	345
M1	Ø22.2, 6.3 key, no thread, 41.2L, SAE "B"	parallel	—	—	—	251
M2	Ø25.4, 6.3 key, no thread, 46L, SAE "B-B"	parallel	—	—	—	395
T1	Ø21.59, 11.2L, 4.0 key, M14x1.5	taper 1:8	—	—	—	250

Shaft loads PGP/PGM600

Code	Description	Type	Torque rating 620 [Nm]	Torque rating 640 [Nm]
C1	11T, 16/32 DP, 38.2L, SAE 19-4	splined	144	—
D1	13T, 16/32 DP, 41.2L, SAE "B"	splined	272	328
E1	15T, 16/32 DP, 46.0L, SAE "B-B"	splined	—	503
E4	14T, 12/24 DP, 5.6L, SAE "C"	splined	—	960
T1	Ø21.59, 11.2L, 4.0key, M14x1.5	tapered 1:8	218	—

Formula to calculate shaft load

$$\text{Torque [Nm]} = \frac{\text{Displacement [cm}^3\text{/rev]} \bullet \text{Pressure [bar]}}{57.2}$$

Hydraulic fluids

Type	Fluid composition	Max. working pressure [bar]	Max. speed [min^{-1}]	Temperature	Seal
Hydraulic fluid	Mineral oil based on hydraulic fluid acc. to ISO/DIN	See table drawings	See table drawings	-15 ... +80°C -15 ... +120°C	NBR FPM
HFB	Water-in-oil emulsion 40/60	140	1500	+2 ... +65°C	NBR
HFC	Water-glycol 40/60	140	1500	-15 ... +65°C	NBR
HFD	Phosphate ester	140	1500	-10 ... +80°C	FPM

Flanges for suction and discharge ports

Please refer to Parker leaflet 4039-1/UK.

Hydraulics Group Sales Offices

Europe

Austria
Wiener Neustadt
Tel: +43 (0)2622 23501
Fax: +43 (0)2622 66212

Belgium
Nivelles
Tel: +32 (0)67 280 900
Fax: +32 (0)67 280 999

Czech Republic
Prague
Tel: +420 2 830 85 224
Fax: +420 2 830 85 360

Denmark
Ballerup
Tel: +45 4356 0400
Fax: +45 4373 8431

Finland
Vantaa
Tel: +358 (0)9 4767 31
Fax: +358 (0)9 4767 3200

France
Contamine-sur-Arve
Tel: +33 (0)450 25 80 25
Fax: +33 (0)450 03 67 37

Germany
Kaarst
Tel: +49 (0)2131 4016 0
Fax: +49 (0)2131 4016 9199

Hungary
Budapest
Tel: +36 (06)1 220 4155
Fax: +36 (06)1 422 1525

Ireland
Dublin
Tel: +353 (0)1 293 9999
Fax: +353 (0)1 293 9900

Italy
Corsico (MI)
Tel: +39 02 45 19 21
Fax: +39 02 4 47 93 40

The Netherlands
Oldenzaal
Tel: +31 (0)541 585000
Fax: +31 (0)541 585459

Norway
Ski
Tel: +47 64 91 10 00
Fax: +47 64 91 10 90

Poland
Warsaw
Tel: +48 (0)22 863 49 42
Fax: +48 (0)22 863 49 44

Portugal
Leca da Palmeira
Tel: +351 22 9997 360
Fax: +351 22 9961 527

Slovakia
Ref. Czech Republic

Spain
Madrid
Tel: +34 91 675 73 00
Fax: +34 91 675 77 11

Sweden
Spånga
Tel: +46 (0)8 597 950 00
Fax: +46 (0)8 597 951 10

United Kingdom
Warwick
Tel: +44 (0)1926 317 878
Fax: +44 (0)1926 317 855

International

Australia
Castle Hill
Tel: +61 (0)2-9634 7777
Fax: +61 (0)2-9899 6184

Canada
Milton, Ontario
Tel: +1 905-693-3000
Fax: +1 905-876-0788

China
Beijing
Tel: +86 10 6561 0520
Fax: +86 10 6561 0526

Asia Pacific Group
Hong Kong, Kowloon
Tel: +852 2428 8008
Fax: +852 2425 6896

India
Mumbai
Tel: +91 22 7907081
Fax: +91 22 7907080

Japan
Tokyo
Tel: +(81) 3 6408 3900
Fax: +(81) 3 5449 7201

Latin America Group
Brazil
Tel: +55 12 3954-5100
Fax: +55 12 3954-5266

South Africa
Kempton Park
Tel: +27 (0)11-961 0700
Fax: +27 (0)11-392 7213

USA
Cleveland (industrial)
Tel: +1 216-896-3000
Fax: +1 216-896-4031
Lincolnshire (mobile)
Tel: +1 847-821-1500
Fax: +1 847-821-7600

Parker Hannifin is the world's premier supplier of motion and control systems and solutions, with sales and manufacturing facilities throughout the world. For product information and details of your nearest Parker sales office, visit us at www.parker.com or call free on 00800 2727 5374.

Catalogue HY11-3302/UK
02/05

© Copyright 2005
Parker Hannifin Corporation
All rights reserved.